Hardwire & Cable Design in Secure Communications

Dr. Bruce C. Gabrielson

Security Engineering Services, Inc
P.O. Box 550
Chesapeake Beach, MD 20732

ABSTRACT

There are many considerations in cable and wire design for emission secure applications. Technically, the determination of which factors are significant, or should be given priority, is governed by the specific vulnerability conditions and design problem. There are, however, some general design guidelines and considerations that are important in most applications. This book discusses some of the common TEMPEST considerations that are felt to be most significant, and some problem areas that are not often considered.

Specifically, the book deals with physical design requirements and spurious signal requirements related to hard wire cabling. Physical design relates to frequency considerations, current carrying capability, voltage safety factor, and signal attenuation. Spurious signal problems relate to security level, cross-talk, inductively induced reference noise and signal radiation. Non-direct but related design issues include Electrostatic Discharge (ESD) and Electromagnetic Pulse (EMP).

My thanks to Dr. Curt Bush for his technical and mental support during the time when I was initially planning this text.

TABLE OF CONTENTS

LIST OF FIGURES

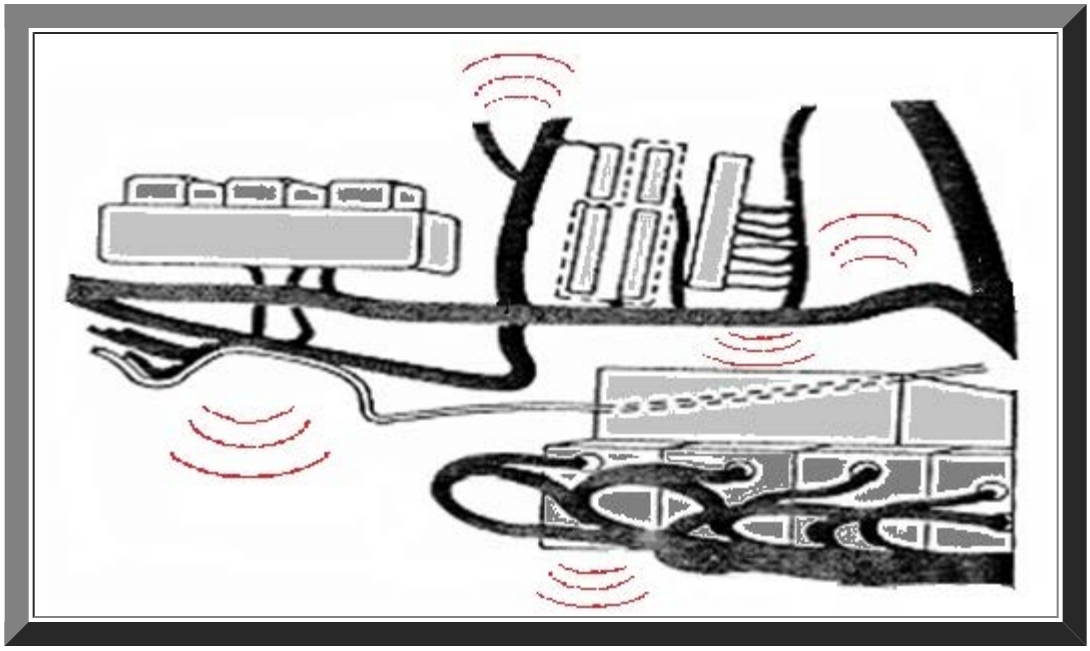

Thanks for your interest in this handbook. It contains a great deal of information related to securing cable systems as well as some other items of interest to those tasked with protecting their information systems from survieience activities.

Dr. Bruce Gabrielson, NCE

Hard Wire and Cable Design in Secure Communications
Copyright 1993

Chapter 1

Introduction

An Introduction to Cabling Problems

Selecting the proper electronic wire type, bundle configuration, routing scheme, shielding, and connector are no simple tasks for a TEMPEST Engineer. There is a multitude of circumstances and problems to investigate, not just from the TEMPEST perspective, but also, in the case of military hardware, from the perspective of EMI, EMP, ESD, lightning protection, radar cross detection, and weight, and environmental considerations. Take for example, the case of the multitude of wiring harnesses and interconnections in the F-8 aircraft. As shown in Figure 1.1, a significant concentration of wiring and cables are used in the front part of the platform, with longer cable lengths running towards the rear.

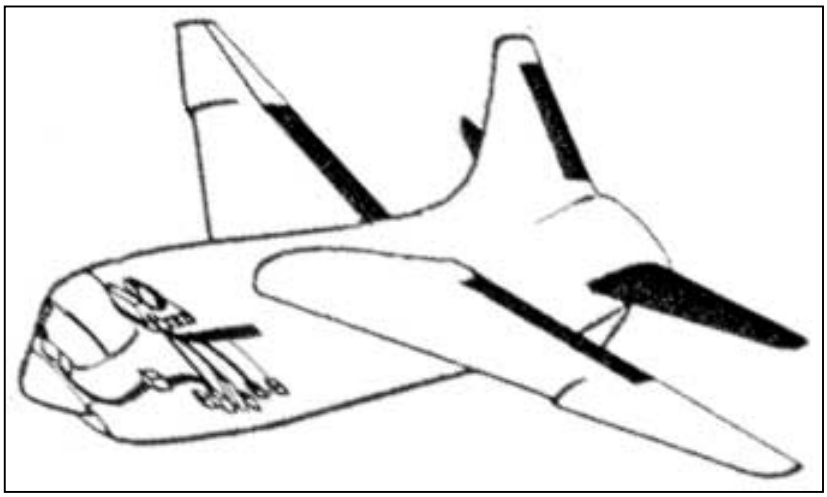

Figure 1. 1 Gunbay Wiring Location

Figure 1.2 shows the multitude of cable bundles inside the gunbay of the F-8 aircraft. Similar complex braided harnesses are also found on most modern aircraft. Practically any potential EM problem possible could occur in the complicated configuration such as exists in these systems. Concern here for each of the electromagnetic phenomena, the weight, and environmental constraints have significant impact on not only the type of cable that can be used, but also on the ultimate tradeoff between level of protection achievable and cost. In addition, with the increasing demands on new cable performance in applications with higher and higher frequency digital data rates, underwater service, and local area networking, previously successful approaches for military and commercial hardware are often not sufficient to provide the level of protection desired for newer equipment.

Figure 1.3 shows the TEMPEST secure inertial navigation system on a C-12. On larger aircraft platforms, such as the U.S. Airborne Command Post aircraft, shielded cable harnesses and protected power/ground systems allow the use of many different equipment types

interconnected in a secure environment.

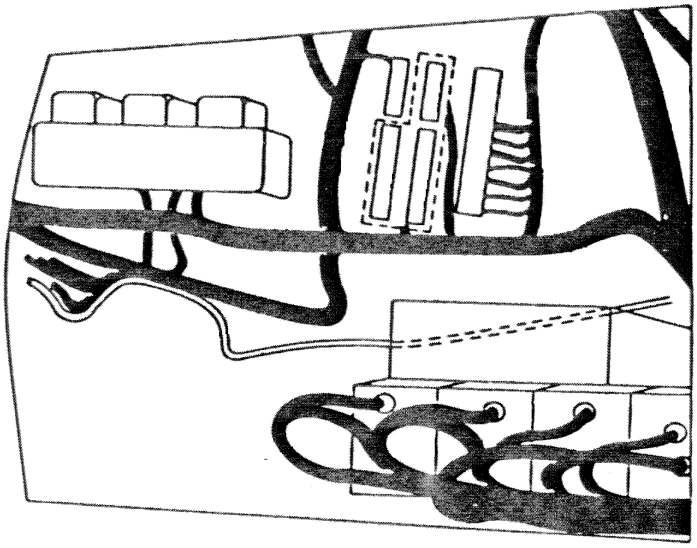

Figure 1. 2 Gunbay Wiring

This book looks at solid metal wires and cables from several perspectives. Besides the usual electrical, frequency, and physical configuration requirements, shielding, coupling, and routing will also be evaluated. The primary interest of this paper will be first the three fundamental concerns that non-fiber optic wires and cables have in the EMI environment; radiated emission antennas, radiated susceptibility antennas, and cable-to-cable crosstalk couplers. Since cables act as long wire antennas resonant at a wavelength four times their physical length, and since the majority of cable emission problems arise from common mode noise on the cable, the focus will be on eliminating this noise through grounding (or re-routing), shielding, and filtering.

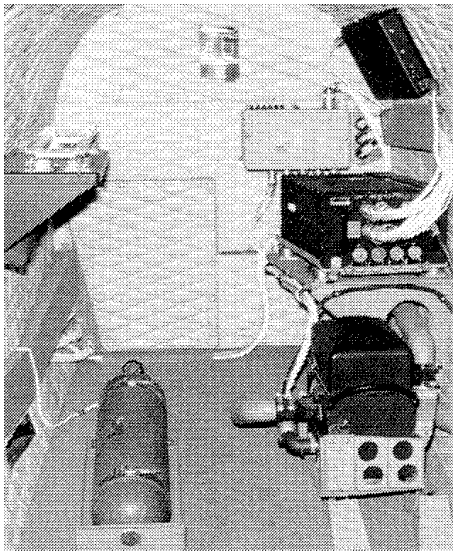

Figure 1. 3 Internal Navigation System

The second area of interest to be examined in this paper is interactive grounding. Since a host of varying electromagnetic requirements drive the wiring and cabling design process, the possibility exists that a protection technique acceptable for satisfying one potential threat might prove unacceptable for satisfying another electromagnetic type threat.

Fiber optic cables are inherently secure and EMI/EMP/lightning immune. While their suitability and cost ratio in the ruggedized military and airborne environment is questionable at this time, their ultimate application to stringent environments represents a significant potential for secure and non-secure hardened communications.

Chapter 2

Basic Conductor Theory

Electrical Requirements

The electrical requirements of your system generally dictate the configuration of the wire or cable used. Basic considerations include voltage, current, frequency, signal attenuation, velocity of propagation, inductance, capacitance, source and load impedance, and characteristic impedance. Depending on a particular engineer's background, selecting the proper electronic wire or cable can be either simple or immensely complex. TEMPEST Engineers, do to the nature of problems usually encountered, should consider wire selection one of the more serious issues they face.

The first consideration that should be evaluated by any engineer is current carrying capability and voltage safety factor. The voltage safety factor (insulation breakdown voltage divided by operating voltage) for cables, due to their considerable flexing and moving, should be between 70 and 100 for each conductor. Hook-up wire, which is normally used inside a chassis and is seldom flexed, has a voltage safety factor of 10 to 20. Test probe wire, with virtually no voltage or current requirements, only has a voltage safety factor of 3 to 5. Figure 2.1 relates safety factor to volts/mil values. The next general consideration is frequency requirements. With higher frequency signals, more care must be given to cable selection and connector terminations because of the higher insulation losses and the need for broadband impedance matching. With an AC or pulse signal, the cable capacitance must be charged before the load can receive full signal voltage from the source. If capacitance is to large, the load voltage at higher frequencies may never reach the full source value, and it may be greatly changed in shape because the cable is acting as a filter. This condition is shown in Figure 2.2.

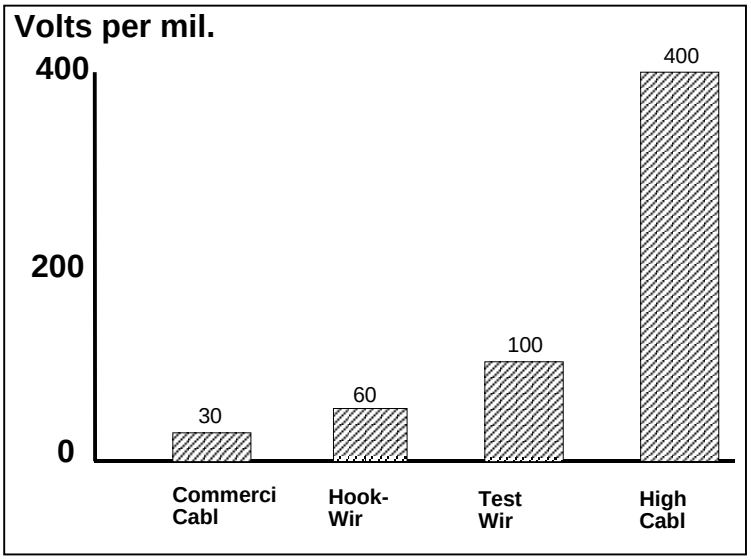

Figure 2. 1 Safety Factors vs. Volts/mil

Inductance and capacitance for wires above a ground plane when air is the separating insulation are expressed in equations 2.1 and 2.2. In the equations, L is in μH/m, C is in pF/m, h

is height above the ground plane (cm), and d is the conductor diameter (cm). The surge impedance of a conductor is defined in equation 2.3.

$$C = \frac{55.56}{\ln(\frac{4h}{d})} \qquad L = 0.2\ln(\frac{4h}{d}) \qquad Z = 60\ln(\frac{4h}{d})$$

Normal engineering techniques to prevent propagation delay problems include using wire insulation with a low dielectric constant, keeping the conductors far apart, and keeping the cable short. However, to minimize TEMPEST emissions from the wire, higher dielectric constant wire insulation and short cable lengths are most desirable. Also, running wires adjacent to a large conductor reduces radiation of signals from the wire. In general, TEMPEST Engineers should design wires and cables such that they have just enough capacity to get a recognizable digital signal (the fundamental and the first three harmonics) across the cable and no more.

Associated with the wire's capacitance are its attenuation characteristics. A wire's attenuation is an indication of losses due to heat generated by the transmission of a signal through the wire. Part of the conductor loss is a result of resistance, while the AC capacitance loss factor is proportional to the product of the dielectric constant and the dissipation factor value for the wire. The attenuation may thus be specified independent of cable impedance or capacitance in the since that the physically larger of two cables with equal capacitance and impedance will have lower attenuation. Theoretically, cable rise time is related to attenuation. The lower the attenuation and the higher the impedance, the faster the rise time.

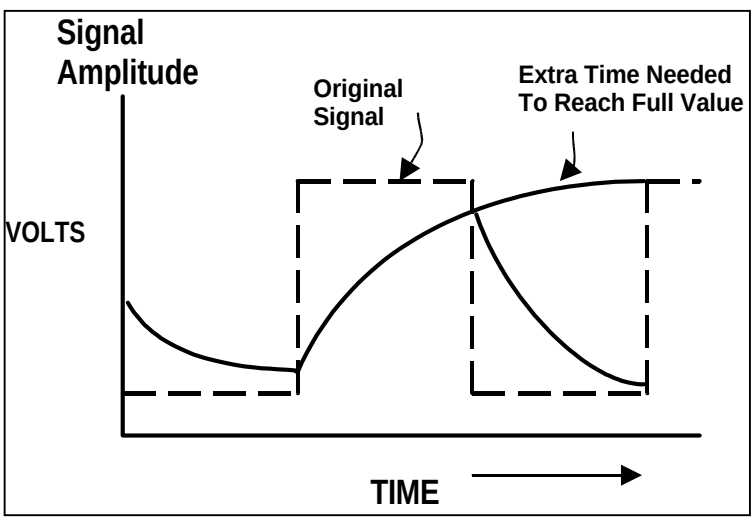

Figure 2. 2 Rise Time Distortion

Higher dissipation factors are often used in TEMPEST applications where adding an additional component to reduce signal strength on the interface driver is impractical. Also, since wires are normally not intended for larger loss applications, sometimes changing the wire dimensions will create the same loss conditions. Care must be exercised, however, because even though smaller conductors have increased resistance losses, AC losses are generally decreased as well. Figure 2.2 shows the effects of frequency on cable attenuation. The slope of the curve increases as capacitive losses become more pronounced in comparison to resistive losses.

Velocity of propagation is another electrical factor to be considered. For similar cable configurations, this factor is inversely proportional to the dielectric constant of the wire insulation. In digital circuits and pulse circuits, waveform distortion can result is propagational velocities are low. Basically, cable rise times that are too slow both reduce the amplitude of the data pulse, and increase the data pulse rise time. The effect can cause data pulses to be miscounted and result in increased bit-error rate. Figure 2.3 shows the pulse loading effects with fast and slow rise times.

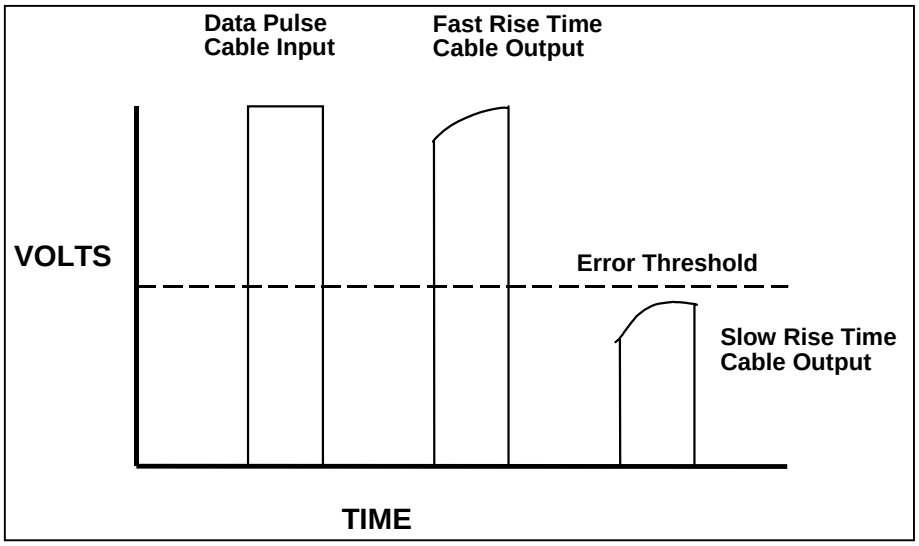

Figure 2. 3 Pulse Loading Effects

Table 2.1 shows the velocity of propagation and time delay of cables insulated with the most widely used dielectrics[1]. With other conditions equal, the use of the dielectric with the lowest capacitance cable will result in the highest nominal velocity of propagation.

Associated with velocity of propagation is characteristic impedance. Although cable line drivers generally have much lower impedance than the cable they drive, mismatch at some point in the spectrum, especially at high bit rates, always exists. Impedance's must be carefully matched at the principal Red data rate to prevent signal reflection and the creation of standing waves along the cable transmission line path. In addition, selected high frequency capacitors are often added in parallel to the load to allow for load impedance changes at frequencies where the main capacitors turn inductive. Large standing waves not only create significant TEMPEST problems, but their presence can overstress the voltage safety factor of a wire where low safety factor value wire is utilized.

Table 2.1

Cable Dielectric	Time Delay (nanosec/ft)	Velocity % c
Solid Polyethylene	1.54	65.9
Foam Polyethylene	1.27	80.0
Foam Polystyrene	1.12	91.0
Air Sp. Polyethylene	1.15-1.21	84-88
Solid Teflon	1.46	69.4
Air Space Teflon	1.13-1.2	85-90

Conductor Physical Design

[1] ***RF Transmission Lines, The Complete Catalog & Handbook***, *Times Fiber Communications, Inc., Wallingford, Conn.*

Copper is the most commonly used conductor in wire and cable design, although generally plated or coated with one of several other metals. Tin and silver are common plating materials. If added strength or long flex life is needed, copper alloys or copper covered steel conductors are usually specified. While copper covered steel has only 30 to 40 percent the conductivity of an all-copper conductor at low frequencies, conductivity at high frequencies is nearly the same because of skin effects.

Nonmetallic conductors, textiles or compounds impregnated with conductive particles, are an option in high voltage CRT applications, or where suppression of noise using high conductor resistance is practical. In general, these conductors are expensive, and should only be considered in TEMPEST applications when other techniques fail. However, their use has proven reliable in many instances.

Spurious Coupling in Cables and Wiring

Understanding the electrical characteristics of a wire or cable is half the battle. The TEMPEST Engineer must also understand the electromagnetic characteristics of signals when they are transmitted down a conductor. Spurious coupling in cables and interface wiring occurs as a result of the sharing of common conductor impedances, transformer action between conductors, and capactive coupling between conductors. It is also possible for the conductor to react to magnetic and electrostatic fields in ways that produce magnetic coupling and capacitive coupling to objects other than adjacent conductors.

Common Impedance Coupling

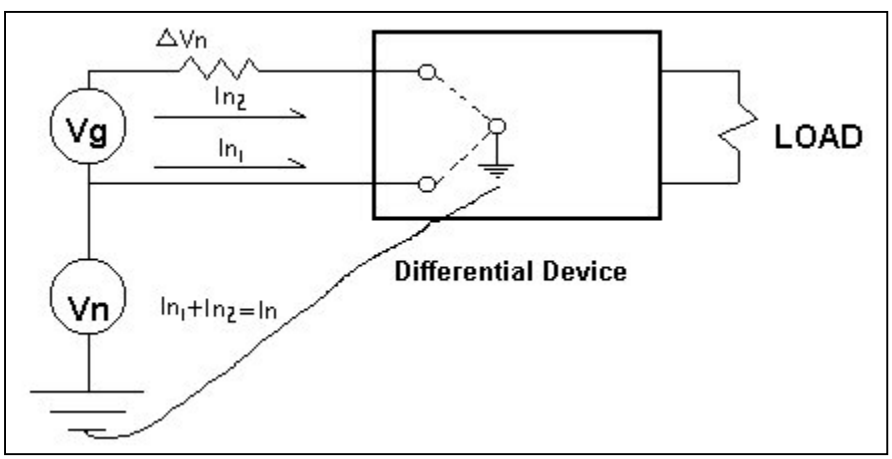

Figure 2. 4a – Balanced Circuit

When a conductor is shared by several circuits, the flow of current from one circuit through the shared common impedance produces a voltage drop that may affect the operation of other circuits sharing the same conductor. This effect can cause common mode susceptibility problems for EMI Engineers, and signal coupling on all interfaces in a TEMPEST environment. If the common impedance is a signal return for several

similar channels, inter-channel crosstalk occurs.

If the common impedance is shared by both the input signal return and the output signal return of an amplifier, unplanned feedback will take place as shown in Figure 2.4-a through c. Should the output voltage be in phase with the input, positive feedback is created. If gain of the amplifier is greater than the spurious coupling loss of the feedback path, the loop gain will exceed unity, and the amplifier will oscillate. On the other hand, if the loss through the spurious coupling path exceeds the gain of the amplifier, the amplifier won't oscillate, but its operating characteristics will be altered drastically. In may cases the gain will increase, the bandwidth will decrease, the output impedance will increase, the distortion will increase, and the amplifier will operate in an unstable region. An unstable amplifier, or even an unstable transistor, can easily become not only the primary carrier source, but also the source of modulation in a TEMPEST environment.

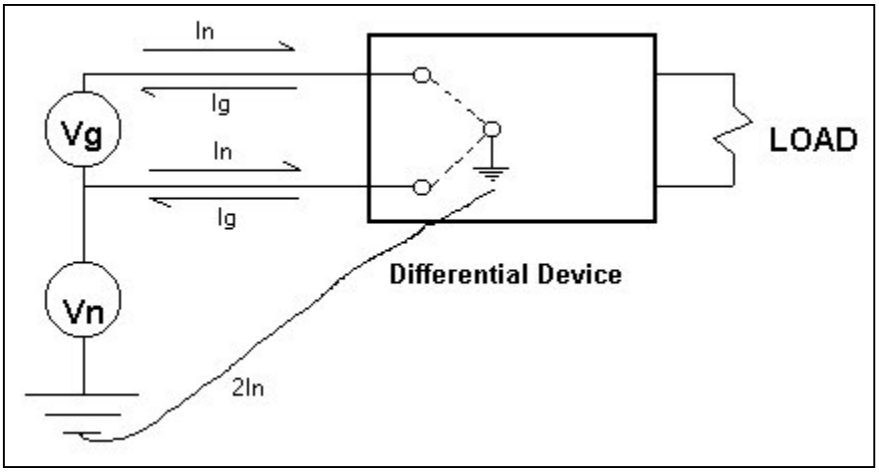

Figure 2.4b – Effect of Unbalanced Line on Differential Circuit

When the amplifier's output is out of phase with its input, negative feedback takes place. This condition causes gain and output impedance to decrease, bandwidth to increase, and the amplifier will be more stable. While some of these changes seem desirable, they often produce unplanned and relatively uncontrolled shifts in the component and system operating parameters.

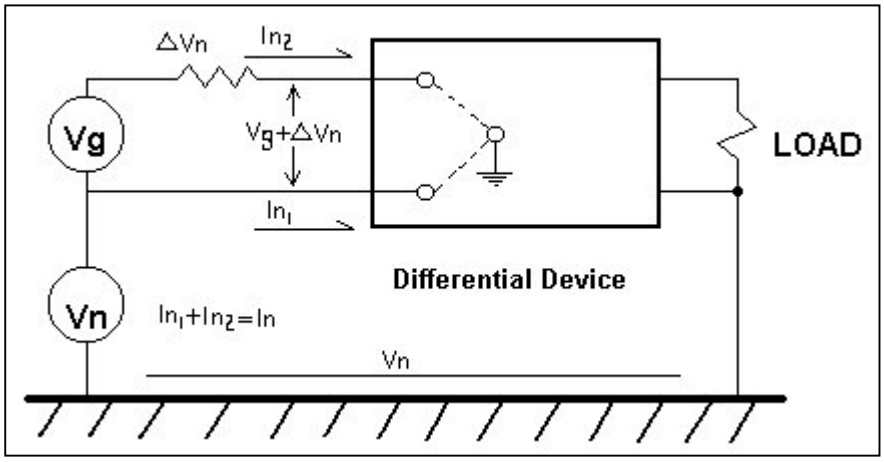

Figure 2.4c – Common-Mode Voltage Generated by Current Flow in Finitely Conducting Ground Plane

Capacitive Coupling

When two conductors are in close proximity to each other, they form a small but finite capacitor. The conductors act as capacitor plates with the wire insulation and any other non-conductive materials forming the capacitor dielectric. Any varying voltage on one of the conductors is capacitively coupled into the impedance connected to the other conductor. This spurious coupling path is different from the common impedance coupling case described previously. However, the same basic cross coupling and/or feedback path exists and the same basic principles apply.

Magnetic Coupling

The mere existence of a longitudinal conductor creates a small but finite inductor. When two conductors are in close proximity to each other, they form a transformer as a result of mutual inductance M_{12} between each conductor. Any varying current flow in one conductor is inductively coupled into the other conductor as an induced voltage due to the transformer action (flux linkage). Again, this spurious coupling path is different from the common impedance coupling case described previously, although the same basic principles apply.

If the critical circuit is a Black circuit forming a loop through a ground path, the maximum voltage that can be induced into this loop by a Red signal carrying wire is found from:

$$E \cong (3.19 \times 10^{-8})\ f\ L\ I\ (r_2/r_1)$$

Where:

- f = frequency in Hz
- L = loop length in inches
- I = current in the Red line
- E = induced voltage
- r_1 = closest distance of loop to wire, inches
- r_2 = farthest distance of loop to wire, inches

The above equation is nearly exact for a square loop, and becomes less exact with orientation and deviation from a square. This means that should a ground loop be identified within a cable system, its orientation with respect to signal carrying wires could be optimized.

A typical susceptibility example that would also couple signals throughout the system might consist of a video recording amplifier for a low level multiplexed instrumentation tape recorder. The amplifier supplies ten milliaperes to the recording head. The amplifier circuit is packaged as a potted welded module with a single connector for power, signal input, test points and recording head output. The conductors in the interconnecting cable branch are bundled together for a distance of two feet before fanning out to the power supply, input connector, test connector and recording head. All conductors consist of a conventional unshielded untwisted single conductor

wire. The tape recorder amplifier has a bandwidth of 100 KHz, a sensitivity of one millivolt and an output of ten milliamperes into the recording head.

Ten milliamperes of 100 KHz recording head current flowing through two feet of wire will induce 2.25 millivolts into the adjacent signal input conductor. The input impedance of the recording amplifier is 100 Kohms; therefore the 2.25 millivolts open circuit, does not decrease due to circuit loading. 2.25 millivolts coupled into an input circuit with a sensitivity of 1 millivolt will cause the recording amplifier to oscillate if the feedback is in phase with the input because the gain through the amplifier exceeds the loss through the spurious coupling path. If the feedback is out of phase with the input, considerable negative feedback is created, changing the amplifier characteristics significantly.

If the cable branch containing both the amplifier's input and amplifier's output wiring is split up to separate these leads, or if the same effect is created by using twisted or shielded wire, the spurious coupling can be reduced to an acceptable level. Figure 2-5 shows such a condition and the associated grounding for a differential amplifier. Splitting the cable branch within four inches of the amplifier module connector would reduce the spuriously coupled voltage at the amplifier input to 375 microvolts providing a stability margin of 8.5 DB for an amplifier with an input sensitivity of 1 millivolt. However, from a TEMPEST perspective, this signal level is still high enough to cause TEMPEST problems.

Substituting twisted pairs for the amplifier input and amplifier output wiring, with the twisting maintained to within one inch of the amplifier module connector, would reduce the spuriously coupled voltage at the amplifier input to 94 microvolts providing a stability margin of 20.5 DB.

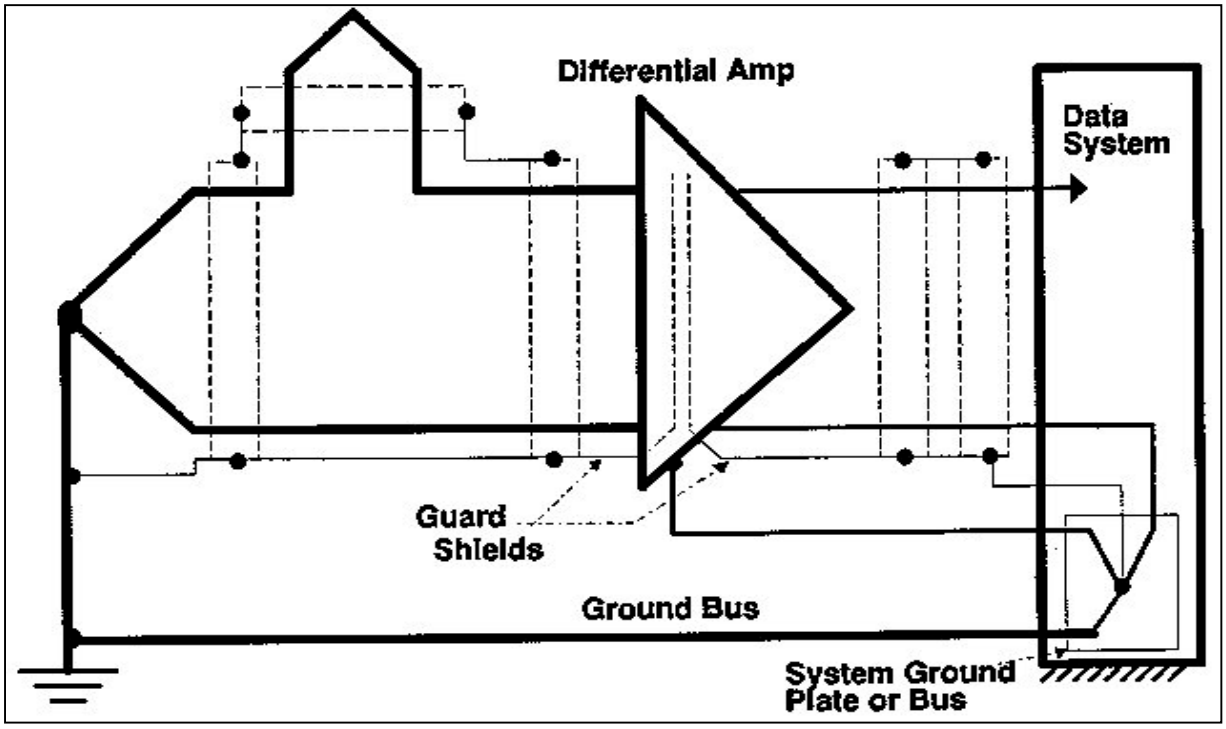

Figure 2. 5 – Cable Branch Separation for Differential Amplifier

Substituting shielded conductors at the amplifier input and output wiring, with the shielding maintained to within a minimum of one inch of the amplifier module connector, would produce a similar improvement.

Magnetic Coupling Protection Using Twists

The magnetic shielded effectiveness of ordinary non-ferrous shielding materials is considerable lower than that of ferrous materials below approximately 100 KHz. Even ferrous materials have a relatively low magnetic shielding effectiveness at 60 Hz and 400 Hz when applied in a reasonable thickness. Twisted wiring, even without a shield, provides the most effective isolation from low frequency magnetic fields.

The choice between shielding, using coaxial cable, or wire twisting, and the decision as to shield and twist or not is a perennial source of confusion. Hardware limitations, level of security, and amount of hardening required frequently determine the approach which will provide the best system performance. A discussion of hardware and wiring isolation system limitations that will influence the selection of an optimum wring configuration follows.

When a conductor is surrounded by a changing magnetic or electric field, current flow is induced in the conductor causing a voltage potential to appear at each conductor end. The amplitude of this induced voltage is proportional to the intensity of the field. Every circuit has two conductors, a "hot" lead, and a return lead, bus, or structural return path to provide circuit continuity. The problem voltage impressed across the functional circuit is the instantaneous difference between the voltage on the "hot" lead, and the voltage appearing in return path conductor at the functional circuit.

Notice the pick-up loop shown in Figure 2-6. The condition depicted is a single wire radiating source inducing a voltage into a pick-up loop located a distance d from wire to loop center point. Voltage in the loop is proportional to the area of the loop. Obviously, reducing the loop area through twisting, or increasing the distance between the loop and the coupling source will create a significant reduction in induced voltage.

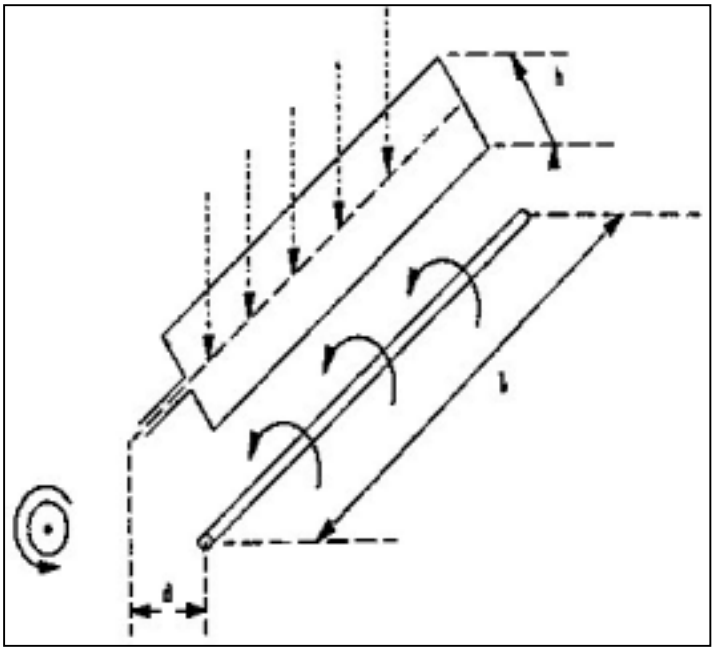

Figure 2. 6 – Pick-up Loop Coupling

Since the current induced in each conductor is proportional to the field intensity on the conductor, it is possible to create identical voltages in

two conductors if they can be made to occupy points of identical intensity within the field. If identical voltages are created in both conductors, no differential voltage between conductors exists. The functional circuit, therefore, has no interference voltage impressed across it, with all problem voltages being cancelled.

The simplest way to cause conductors to occupy points of identical intensity within a changing electromagnetic field is to twist them symmetrically. Since the conductors rotate about a common axis, they occupy points of maximum and minimum field intensity sequentially as the twist proceeds down the conductors longitudinally. Induced voltages resulting from the field intensities on each conductor differ at any given point in a twist, but the sums of the induced voltages averaged over the lengths of the conductors will be almost identical.

The length of the twist must be an extremely small fraction of a wave length at the problem field frequency to obtain satisfactory cancellation of the interference voltages. At frequencies where the length of the twist becomes a significant fraction of a wavelength, the instantaneous intensity of the wavefront impinging on the conductors at all points along the twist will not be uniform, and satisfactory cancellation of the fields will not occur.

The twist rejection, or the amount of reduction in coupling provided by twisting a wire pair is found by the following equation:

Twist Rejection = $-20 \log_{10} \{(1/(2nL + 1)) [1 + 2nL \sin (\pi/n\lambda)\}$ greater than or equal to 60 dB

Where:

N = twists per meter
L = wire length in meters
λ = wavelength in meters

Twisting a cable pair also reduces the radiated magnetic field associated with current flow in the wires.

Twisted Shielded Pairs Verses Coaxial

Balanced, shielded twisted pair cables and coaxial cables are complementary rather then competitive. Each has strong and weak points. Twisted conductors are the only effective means of preventing power frequency and audio frequency magnetic fields from introducing an interference voltage at the functional circuit end of interconnection wiring in situations where conductors are balanced to ground, and the shield is not a current-can-ying member of the system. Conventional non-ferrous shielding braids are not effective magnetic shields at low frequencies. Specialized magnetic shielding foils are also relatively ineffective magnetic shields at low frequencies when used in practical thickness'.

Coaxial cables are most suitable for unbalanced circuits with the shield grounded and serving as one conductor. Coaxial cables are more nearly broadband frequency devices than are twisted

pairs. The shield on a coaxial cable is not as effective as shielded pairs since signals picked up by the shield can be conducted and coupled directly into the functional circuit. The only way to avoid this problem is to use a triaxial constructed cable, which is both expensive and difficult to terminate. Coaxial cables are primarily used at both audio and radio frequencies, and have both lower capacitance per foot and lower attenuation than twisted cables.

Cable Shielding

The primary means used to isolate hard wire conductors is to apply shielding. Shielding can either protect the internal conductor from external radiated fields, or it can reduce or contain self generated fields. The shield not only provides a low-impedance path to reduce flux lines generated by a conductor, but it often provides the primary return path for signal current flow. Consider the single conductor coax type transmission lines shown in 2-7 a) and b). Condition a) shows a perfectly balanced transmission line. Unfortunately, unless transformer or optical isolation type termination is used, this condition a can never be fully achieved.

The most common real world condition is shown in b). In this case, the transmission line is unbalanced with return current flowing through the load to both the cable shield and through some common ground path. In the majority of cases, it is this common ground path, used by other return currents, that is the ultimate source of problem coupling.

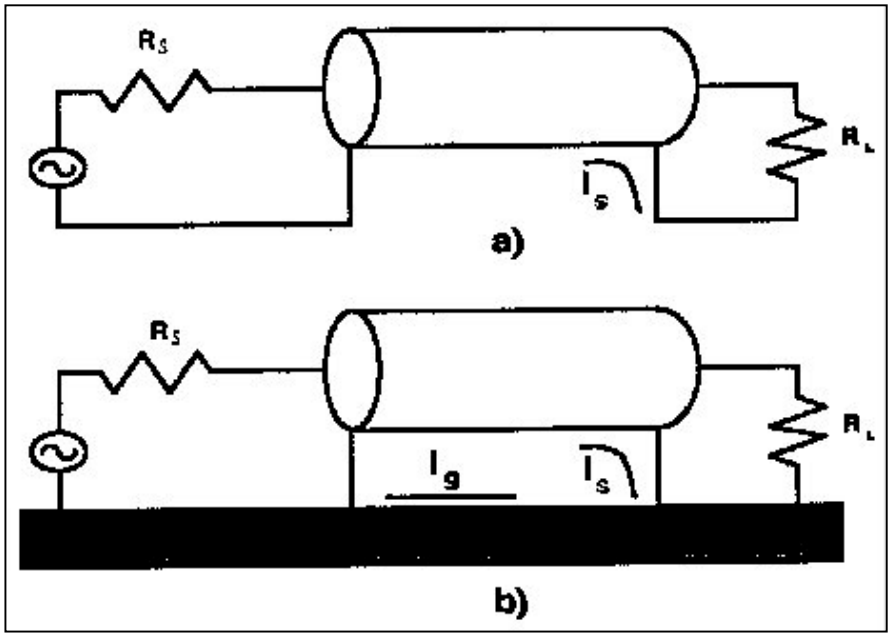

Figure 2. 7 – Single Conductor Coax Transmission Line

The proportion of current flowing in the two paths depends on the relative impedance of each. The ground structure or chassis is usually significantly lower impedance then the cable shield, especially at lower frequencies where distribution is primarily resistive. At higher frequencies, the cable shield represents the lowest impedance path, primarily because of two reasons. First, because higher frequency currents flow more on the conductors surface, hence the shortest direct path. Second, the magnetic field coupling between the inner conductor and the shield significantly reduce the impedance to return currents in this path.

Figure 2-8 shows an equivalent circuit for a conductor and its associated shield. The shield is represented by the combination of a series inductance and resistance adjacent to a conductor. For a coaxial type cable, every magnetic flux line will encircle both the inner conductor and the outer shield, causing a distributed mutual inductance between the two conductive paths. In this case the mutual inductance M will equal the self inductance of the outer shield L. The current distribution between the inner conductor and outer shield can be found by setting the loop equation equal to zero for these paths.

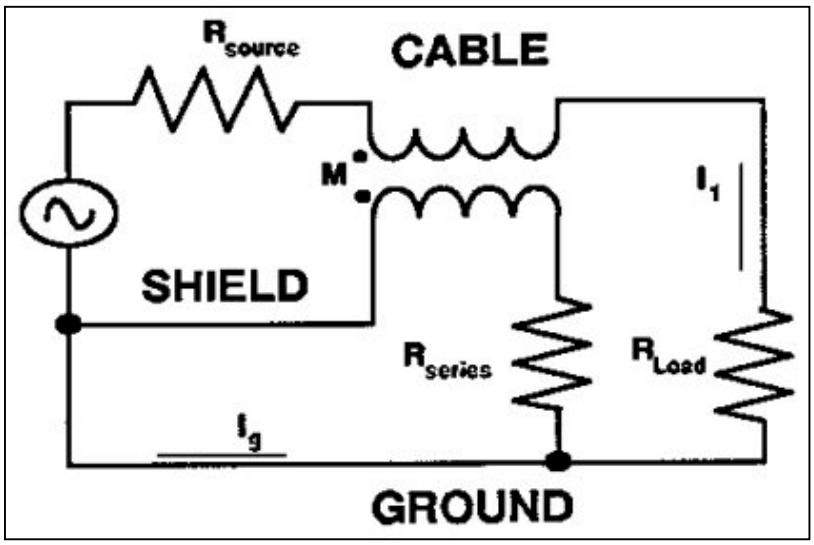

Figure 2. 8 – Conductor Shield Equivalent Circuit

For this case, the transfer function approaches unity at high frequencies. The breakpoint for the high pass transfer function is $\omega_c = R_s/L_s$ known as the shield cutoff frequency. The shield cutoff frequency is the frequency at which only 70.7 percent (3 dB) of the signal current returns in the shield. The most common rule of thimb for determining the lower limit of a shield for good magnetic shielding is $5\omega_c$.

Chapter 3

Natural Antennas

Cables as Antennas

Many conductors oriented in various physical configurations can form natural antennas. This chapter deals with those cable configurations most likely to appear in normal applications, and which can cause compromising emission radiation of the signals they carry.

Standing-Wave Antennas

Standing wave antennas, as the name implies, exhibit standing waves of current and voltage along their surface. In a transmitting antenna of this type, a progressive or travelling wave is supplied from the power or signal source. When the wave reaches a cable end or termination, it is reflected. The combination of the two waves sets up a standing wave pattern along the cable.

The current of the standing wave is always zero at one cable end, and the voltage a maximum, making the current and voltage ninety degrees out of phase. For very thin antennas the distribution of current and voltage is very nearly sinusoidal.

The simplest and one of the most commonly used standing-wave antennas is the half-wave dipole. Figure 3.1 shows both a standard half-wave and a full-wave standing wave antenna.

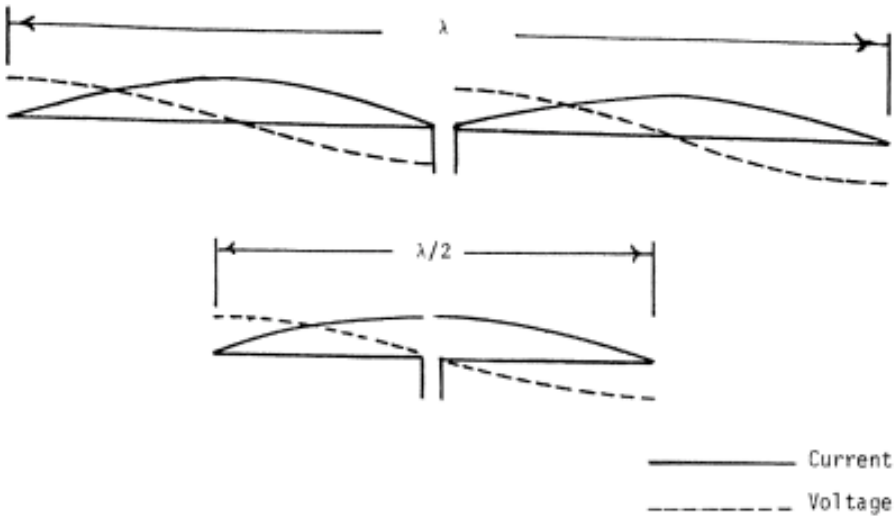

Figure 3. 1 Half-Wave and Full-Wave Antennas

An unintentional standing-wave antenna can be formed if RF is unintentionally coupled onto a conductor located parallel to the conductor carrying the RF through capacitive coupling. If the wire is terminated in high impedance, or it has a ferrite bead around it to form an RF choke, reflections will start at the point where the RF choke has been placed. If the wire is longer than about one eight wavelength from the choke or high impedance point back to the coupling point, it will have a standing wave on it and will act as a standing-wave antenna.

Resonant Antennas

Many antennas are operated at or near resonance, which means that the reactive component of their input impedance is either zero or very small compared with the resistive component. An example of a resonant antenna is a center fed half-wave dipole. If a natural antenna occurs in a conductor that is not resonant, it can be made resonant by adding either a capacitive or inductive reactance in series to tune the antenna to resonance.

Although antennas are not lumped circuit elements, the input impedance of the simpler type antennas, for a limited frequency band centered on the resonant frequency, is essentially that of a lumped series resonant circuit. The resistance at the resonant frequency is essentially the radiation resistance of the antenna.

As the frequency is increased, the wavelength becomes shorter and eventually a frequency is reached at which circuit conductors become an appreciable fraction of the wavelength. At this point they become radiating elements. It is quite possible for these conductors to form natural resonant antennas.

Travelling-Wave Antennas

A travelling wave antenna, as the name implies, has no standing waves. This is accomplished by terminating the antenna in its characteristic impedance so that no reflections occur. Examples of travelling wave antennas are Rhombic and Vee antennas. These antennas are directive and are usually several wavelengths long.

Any wire that is not shielded and is carrying RF current will radiate. If the wire or conductor is terminated in its characteristic impedance, it will have no standing waves and it will act as a travelling-wave antenna. Thus, it is most important to use coaxial cables as much as possible in RF circuits.

Influence of Near-by Conductive Bodies

The impedance of an antenna is affected by the presence of other conductors in its vicinity, the degree of coupling between the nearby conductors, and also by the length of the conductor. Coupling decreases with increasing distance. For bodies of comparable length the effect is negligible for distances greater than 2 to 3 wavelengths. For conductors less than a wavelength apart, the mutual effect is the factor that forms the directive characteristics and modifies the input impedance of the antenna. Examples of these are an antenna and reflector or director combination and antenna arrays.

For an antenna set near a large conducting plane such as the earth or a large conducting sheet, the mutual effect is manifested in a different way. If the earth is assumed to be a plane surface and perfectly conducting it produces a mirror image of the antenna in the ground. A quarter wave vertical antenna above ground has the same voltage and current distribution as a center fed half-wave antenna (dipole). However its input impedance is one-half that of a half-wave dipole.

Unintentional antennas are also influenced by nearby conductive bodies that modify the antennas behavior. These unintentional antennas are one method whereby RF energy is radiated to the environment outside the equipment, especially if the equipment function is not to produce RF transmission.

Linear Antennas

A linear antenna is a straight thin rod fed by an RF source. It can be center-fed or end-fed. A center fed thin rod antenna is the familiar dipole antenna. Unintentional antennas can be linear antennas if they are straight thin conductors such as flexprint or connector board PC traces.

Half-Wave Antennas

The half-wave dipole, which is one form of resonant antenna as was shown in the lower antenna of Figure 3.1, is most frequently effective in the 100 to 3,000 MHz range, although it is also effective less frequently at frequencies as low as the HF range. In the 100 to 3000 MHz range the free space length $\lambda/2$ is between 1.5 and 0.05 meter. However, the wave velocity in wire is less than that in free space and the actual length is somewhat shorter. The velocity factor is between 0.95 and 0.98 depending on the ratio of the antenna length to diameter ratio.

In the microwave region it is possible for unintentional antennas to be half-wave antennas if the flexprint or wire length, and hence the conductors, can be a half-wave long. At 3 GHz a half wavelength is two inches long.

Wire and rod antennas are principally sensitive to the electric field of the electromagnetic waves impinging on them because they do not enclose any lines of magnetic flux. When the electric field is parallel to the wire or rod antennas the electric field produces a difference of potential along the length of the antenna. A loop on the other hand encloses magnetic flux in the area within the loop provided that the flux lines are at right angles to the plane of the loop. As the flux density varies with the wave motion current is induced in the loop.

Loop Antennas

A loop antenna is a closed-circuit antenna, that is, one in which a conductor is formed into one or more turns so that its two ends are close together. Loops are classified as either small or large. A small loop's total conductor length and maximum linear dimension are very small compared with a wavelength. A large loop is one in which the current is not the same either in amplitude or phase in every part of the loop. A large loop has different radiation characteristics compared with a small loop: its radiation is maximum perpendicular to the plane of the loop while the small loop's is maximum in the plane of the loop.

Unintentional loops can occur if a conductor has turns in it, or if it loops around and through the ground such as the shield on a cable between two terminals. A loop can exist even when one end is grounded. Since any conductor has inductance and capacitance as well as resistance, a grounded conductor may not appear as a short circuit at RF, and at some frequencies can form a loop antenna. If a conductor runs parallel to and is connected to the ground plane, it forms a loop with the ground plane. To avoid these types of loops, grounded conductors should be kept as short as possible. If an unshielded conductor runs parallel to a shielded conductor it will form either a transmission line with the shield or form a loop with the shield depending on whether both of them are grounded at some point.

So called "ground loops" are formed when currents from different parts of the circuit flow through a common ground path. The path may be a ground plane, bus, or power supply. The current flowing through the loop generates a voltage that is applied to all the circuits using the common ground paths. The result is inadvertent coupling between the circuits. The coupling can be inconsequential or can produce significant positive or negative feedback.

Half-Wave Loops

The smallest size of a large loop is one having a conductor length of 1/2 wavelength. The conductor is usually formed into a square, as shown in Figure 3.2, making each side 1/8 wavelength long. The current flow is such that the field strength is maximum in the plane of the loop and in the direction looking from the low-current side to the high current side. If the side opposite the terminals is opened at the center as shown at B in Figure 3.2, the direction of current flow remains unchanged but the maximum current flow occurs at the terminals. This reverses the direction of maximum radiation.

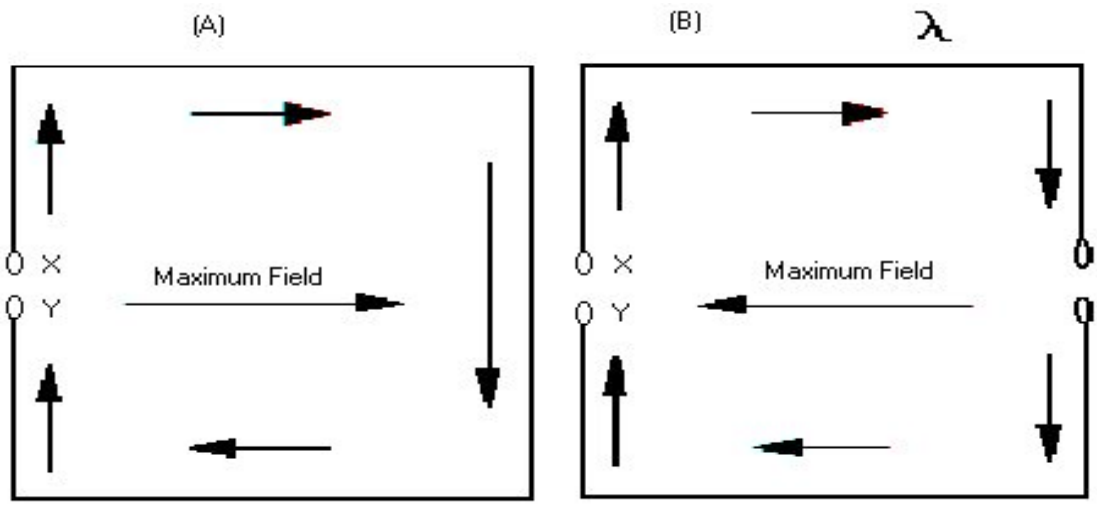

Figure 3. 2 – Half Wave Loop Antenna

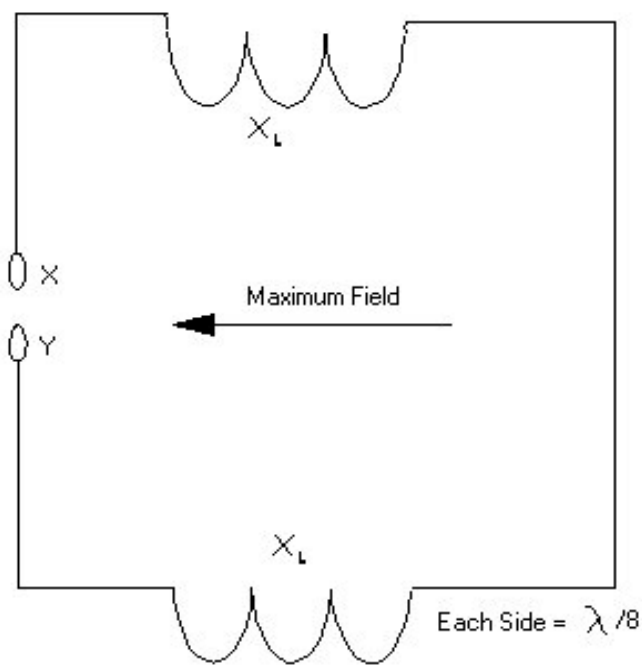

Figure 3.3 – Inductive Loading of a Half-Wave Loop

Unlike a half-wave dipole or a small loop, there is no direction in which the radiation from a large loop is zero. There is appreciable radiation in the direction perpendicular to the plane of the loop, as well as to the "rear" the opposite direction to the arrows shown in Figure 3.2. The front to back ratio is in the order of 4 to 6 dB.

The ratio of the forward radiation to the backward radiation can be increased and the field strength likewise increased at the same time to give a gain of about 1 dB over a dipole, by using inductive reactance to "load" the sides joining the front and back of the loop. This is shown in Figure 3.3. The reactance, which should have a value of approximately 360 ohms, decreases the current in the sides in which they are inserted and increase it in the side having the terminals. This increases the directivity and thus increases the efficiency of the loop as a radiator.

Natural Antennas Formed by Cables

Cables connected to circuit boards can form natural antennas. German, Ott, and Paul (1) have shown how the common mode current in a circuit board trace can be the driving source for an antenna formed by the cables connected to the circuit board. In Figure 3.4, the voltage drop across the lower circuit board trace, by virtue of its inductance and the current flowing through it, forms the driving source for the antenna formed by the cables. The resonant frequency of this antenna is much lower than that of antennas formed from the circuit board traces themselves.

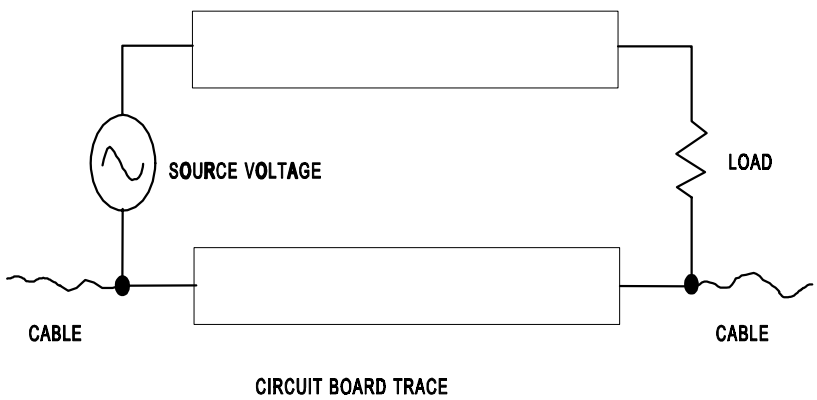

Figure 3. 3 – Circuit Board Trace Voltage Drop

Transmission Lines and Cables

In the previous section, it was shown that separate cables connected to a printed circuit board (PCB) can form an antenna. Transmission lines and cables can also radiate RF signals under other conditions. A parallel wire transmission line, as shown in Figure 3.5, has current flowing in opposite directions in each of the wires. The magnetic fields produced by the two wires will tend to cancel each other depending on the spacing between them. The closer the spacing, the greater the cancellation.

The current flowing in opposite directions in transmission line wires or cable conductors is called differential mode current. If there is an imbalance in the line, the current in each side of the line will not be equal. The unequal portion of the current called common mode current is flowing in the same direction as shown in Figure 3.5. The field generated by a common mode current does not cancel and will radiate.

Transmission lines should be kept as balanced as possible in order to reduce common mode currents. To reduce the field radiated by the conductors, the return path should be included in the cable adjacent to the transmission path and not routed through a separate ground return. The use of twisted pairs for transmission and return reduces radiation by keeping the oppositely flowing currents very close together.

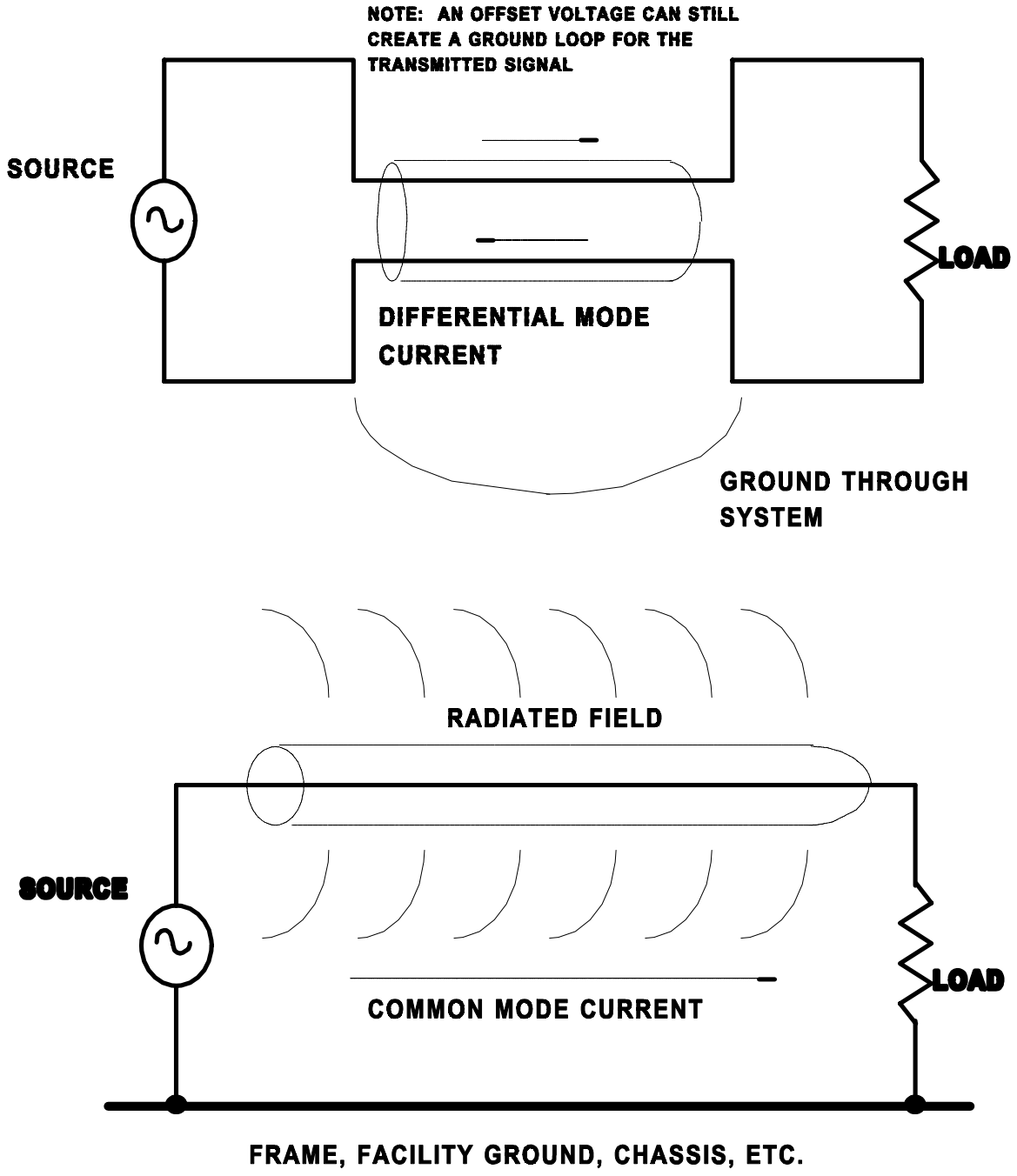

Figure 3. 4 – Parallel Wire Transmission Line System Generated Antenna

Extended "Natural Antennas"

In addition to the occurrence of "natural antennas" on circuit boards and wiring harnesses, "natural antennas" can occur on the power wiring connecting electronic equipment to the power primary feeder lines. These antennas are very much longer than those on circuit boards or wiring harnesses. The RF conducted emissions on the power line can get back to the power primary feeder line through the utility pole transformer.

Figure 3.6 shows the power distribution extended antenna. The powerline ground has inductance that will keep the equipment side of the ground wire at an RF potential above ground. A number six wire has an inductance of 0.301μH per foot. A twenty foot ground wire has an inductive reactance of 37.8 ohms at 1000 KHz. At higher frequencies the reactance is proportionally higher. Therefore, the ground side of the power leads will be at RF potential above ground for any power line conducted RF emissions.

The emissions will couple through the utility pole transformer to the primary feeder. Coupling will be inductive at low frequencies and capacitive at high frequencies. The latter is due to the capacitance between the windings. Thus there is an entire "antenna farm" of radiators for the conducted emissions. The emissions can be radiated great distances from the powerline, and also can be conducted for a fairly long distance unless they are suppressed at the source.

The Overall Picture

Natural antennas, which may be dipoles formed by ICs or loop antennas formed from circuit board traces, will radiate RF signals. Natural antennas formed by cables connected to circuit boards will also radiate RF energy. Conducted emissions on power leads can reach the power lines that appear as long wire antennas from which RF signals will radiate. Each of these sources of undesired RF radiation has to be considered if the generated signals or noise are to be prevented from radiating to the outside world. The best time to consider these factors is during the design stage to minimize retrofitting.

Reference/Bibliography

1. German, R.F., Ott, H.W., and Paul, C.R., Effects of an Image Plane on Printed Circuit Board Radiation, 1990 International Symposium of Electromagnetic Compatibility, Washington D.C.

2. Marcus, R. B., and Gabrielson, B. C., "Natural" Antennas, TEMPEST Hardware Design, AFCEA Training Course, 1990.

3. Burrows, C. R., and Attwood, S. S., Radio Wave Propagation, Consolidated Summary Technical Report of the Committee on Propagation of the National Defense Research Committee, Academic Press, New York, 1949.

4. Orr, W. I., Radio Handbook, Nineteenth Edition, Howard Sams & Co., Indianapolis, 1972.

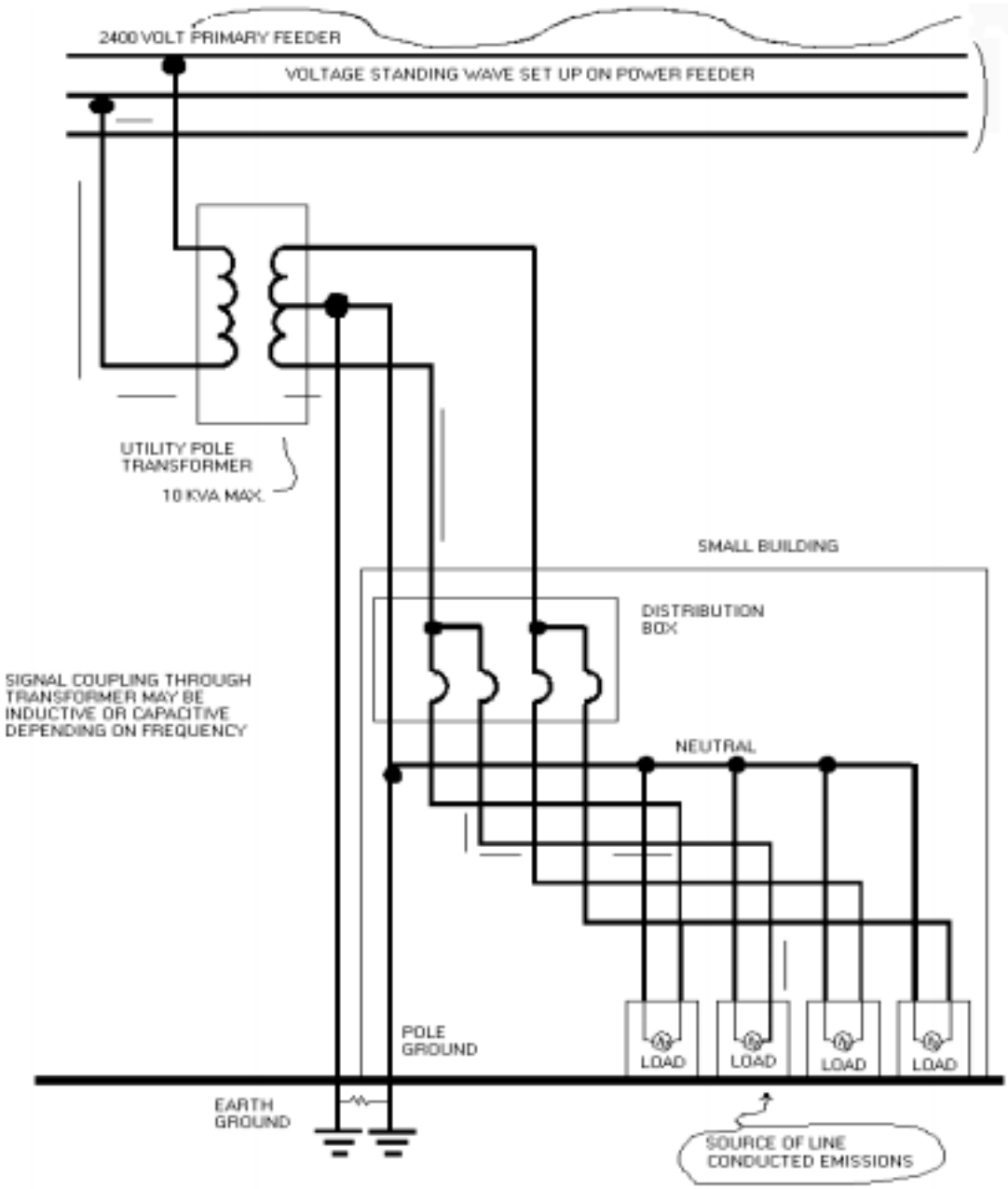

Figure 3. 5 - Power Distribution Extended Antenna

Chapter 4

Shielded Wires and Wiring

Advantages of Shielding

Shielded conductors permit the transmission of low level signals, at high impedance levels, through areas where excessive interference voltages would be induced into low impedance conductors by low frequency magnetic fields, or in areas where sensitive information must be sent. Shields on wires act the same as shields on rooms, the continuous enclosure acting as a Faraday cage barrier to radiated fields. Magnetic fields near the surface will set up currents in the conductor which tend to cancel the incident fields. However, the shield is only as good as its ground reference, since shield currents radiate like any other wire. For best results, both the internal wire and the outer cable must be individually shielded.

Applying the term shielding effectiveness to a cable/connector assemble is really a misnomer. Shielding effectiveness for a cable assembly is a measure of the quality of its shielding[1], and is determined by measuring the Surface Transfer Impedance of the cable assembly. Surface transfer Impedance is the ratio of the magnitude of the longitudinal voltage drop on the outer surface of the shield to the current on the inside of the shield. This subject will be covered again in detail later in this chapter.

The magnetic shielding effectiveness of ordinary non-ferrous shielding materials is considerably lower than that of ferrous materials below approximately 100 KHz. Even ferrous materials have a relatively low magnetic shielding effectiveness at 60 Hz and 400 Hz when applied in reasonable thickness. Twisted wiring, even without a shield, provides the most effective isolation from low frequency magnetic fields.

The choice between shielding, using coaxial cable, or wire twisting, and the decision as to shield and twist or not is a perennial source of confusion. Hardware limitations, level of security, and amount of hardening required frequently determine the approach which will provide the best system performance. Examples of various shielded cable configurations are provided in Figure 4.1 from Belden[2]. Table 4.1 compares several cable types relative to shielding effectiveness, percent coverage, etc. The conductive cotton shield shown in the figure is typical of conductive textiles compared in the table. Similarly, Aluminum mylar is typical of the aluminum foil type shielded wire shown in the figure. A discussion of hardware and wiring isolation system limitations that will influence the selection of an optimum wiring configuration follows.

---

[1] *MIL-STD-1377 (NAVY), Effectiveness of Cable, Connector, and Weapon Enclosure Shielding and Filters in Precluding Hazards of Electromagnetic Radiation to Ordnance; Measurement of, 20 August 1971.*

[2] *Design Guide for Electronic Wire and Cable, Belden Corporation, 1972.*

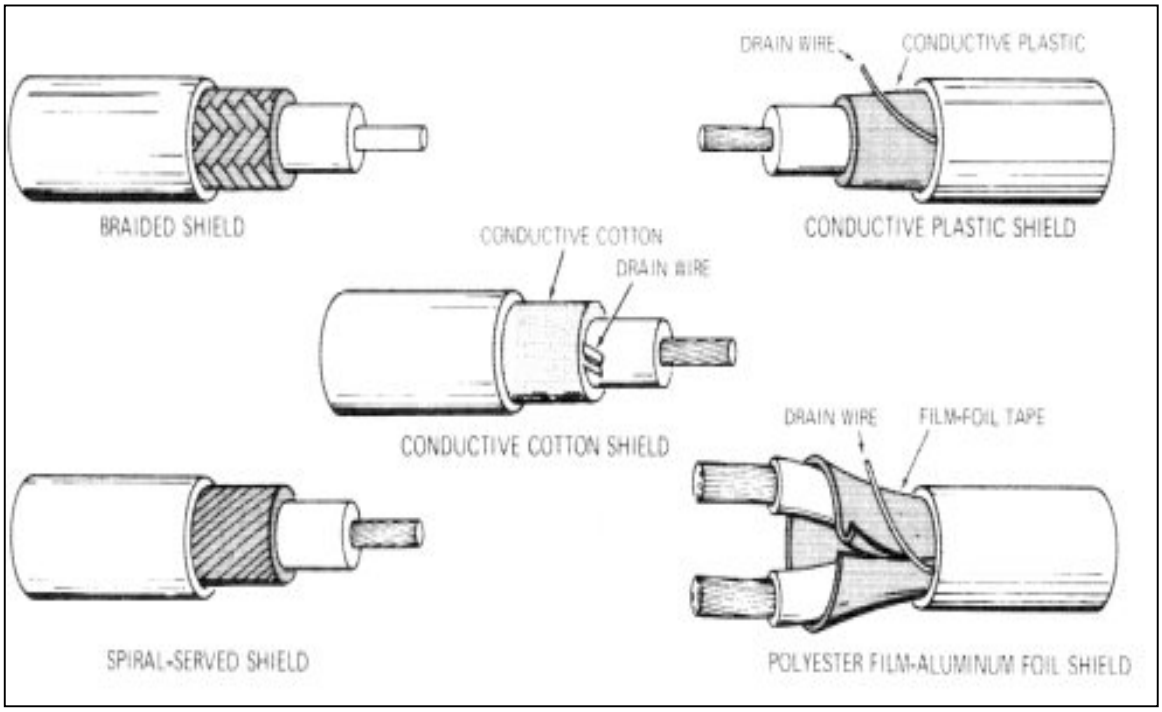

Figure 4. 1 – Various Cable Configurations

Table 4.1
Relative Shielding Characteristics

	Copper	**Copper Cond.**	**Alum. Cond.**	**Textile**	**Mylar Plast.**
Shield Effect. Audio Frequencies	*Good*	*Good*	*Fair*	*Excel.*	*Good*
Shield Effect. Radio Frequencies	*Good*	*Poor*	*Poor*	*Excel.*	*Poor*
Percent of Coverage	*60-95%*	*90-97%*	*100%*	*100%*	*100%*
Termination Method	*Comb & Pigtail Pigtail*		*Drain Wire*	*Drain Wire*	*Drain Wire*

Twisted Shielded Pairs Verses Coaxial

Balanced, shielded twisted pair cables and coaxial cables are complementary rather then competitive. Each has strong and weak points. Twisted conductors are the only effective means of preventing power frequency and audio frequency magnetic fields from introducing an interference voltage at the functional circuit end of interconnection wiring in situations where conductors are balanced to ground, and the shield is not a current-carrying member of the system. Conventional non-ferrous shielding braids are not effective magnetic shields at low frequencies. Specialized magnetic shielding foils are also relatively ineffective magnetic shields at low frequencies when used in practical thickness.

Coaxial cables are most suitable for unbalanced circuits with the shield grounded and serving as one conductor. Coaxial cables are more nearly broadband frequency devices than are twisted pairs. The shield on a coaxial cable is not as effective as shielded pairs since signals picked up by the shield can be conducted and coupled directly into the functional circuit. The only way to avoid this problem is to use a triaxial constructed cable, which is both expensive and difficult to terminate. Coaxial cables are primarily used at both audio and radio frequencies, and have lower capacitance per foot and lower attenuation than twisted cables.

Shielded Wiring

When a high impedance conductor is in close proximity to a second conductor and a structural ground plane, it becomes part of a voltage divider circuit due to the mutual capacity of the three objects. The voltage divider consists of the capacity between conductors in series, with the capacity between the conductor and the structural ground plane.

Substituting a shielded conductor for an unshielded conductor decreases the conductor-to-conductor capacity and increases the conductor-to-ground plane capacity, thus producing a voltage divider with greater attenuation. Two adjacent unshielded conductors in the center of a cable bundle 50 feet long have a mutual capacity of approximately 500 picofarads, forming a voltage divider with negligible attenuation if the terminating impedances are high. When the shields are grounded to the ground plane, the center conductor-to-ground plane capacity will be approximately 6000 picofarads, forming a voltage divider with an attenuation of 1200 to 1 if the terminating impedances are high.

Advantages to Using Twisted or Shielded Wire

Wires act the same as transducers. As mentioned previously, an electric field will induce a voltage between conductors passing through it. A magnetic field induces current flow in conductors passing through it. A voltage differential between conductors produces an electric

field between the conductors. Finally, current flowing through a conductor produces a magnetic field around the conductor with flux lines following the right hand rule.

Twisted wire is capable of reducing the conversion efficiency of the conductors, as a transducer, by a factor of 10,000 to 1 when the wire is properly selected and installed. Twisted wire is normally used in low frequency low impedance circuits that are located in areas associated with high magnetic field problems. Shielded wire is normally used in high frequency high impedance circuits associated with electric field problems.

If wires having a tight twist and tight shield braid weave are selected for use, the achievable limits of improvement are controlled by the installation configuration. Breaks in the cable at connectors and other terminations violate the integrity of both the conductor twist and the shield braid continuity.

Since twisted or shielded conductors can have a theoretical improvement factor of 1000 to 1 over untwisted unshielded conductors, then the achievable improvement factor is controlled primarily by the total length of perturbations in the twist, or shield, unless the total cable length exceeds 1000 times the total length of the perturbations. The achievable improvement factor is the reciprocal of the perturbation length as a fraction of the total cable length. A cable with a total length of five feet, and perturbations having a total length of one-half foot would have an achievable improvement factor of five divided by one-half or 10 to 1, even though the theoretical improvement factor of the cable was 1000 to 1, or 10,000 to 1 under ideal conditions.

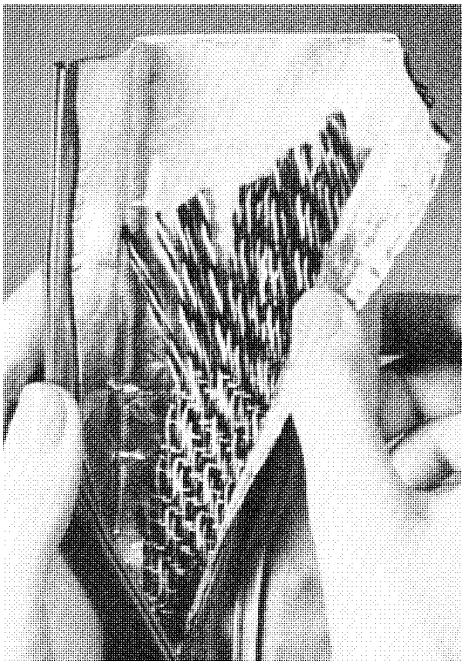

Figure 4. 2 - Zuppertubing

For any cable of reasonable length, the only practical way to increase the achievable improvement factor is to decrease the total length of cable termination perturbations. Reactive cable terminations may have a significant effect on the actual achievable improvement factor, but are a function of circuit design rather than cable design. If shielded wire is substituted for the two center conductors, they will have a negligible mutual capacity except for the areas near each connector where the center conductors are exposed. If the unshielded portions of each center conductor at both ends of the cable have a total length of six inches, the capacity between just these two center conductors will be about 5 picofarads.

The principle types of flexible shielded cables commercially available include shielded single wire, shielded twisted pairs, and coaxial wires. The shield itself can be made of braid, semiflexible conduit, or foil.

Shields are either formed as an integral part of the wire, or can be added such as in the case of "Zippertube" as shown in Figure 4.2.

Braided Shields

Braided shields are not perfect conducting cylinders since they have many small holes which permit leakage of electric and magnetic fields. The weaving of the braided wire shield is described in terms of the number of bands of wires (carriers) that make up the shield, the number of wires in each carrier (ends), and the number of carrier crossings per unit length (picks). These characteristics, along with the radius of the shield, define the volume of metal in the shield, the optical coverage and the weave angle. A large volume of metal not only implies low resistance and good shielding, but it also represents a larger weight problem for aircraft.

Shielding is usually dependent on the percentage of cable coverage provided by the shield braid, and/or the thickness of the shield material. The optical coverage of a shield is a measure of the number of holes in the shield. The higher the optical coverage in a shield, the smaller the open area of the holes, and the better the cable shielding capabilities. The holes between the individual bundles of wire forming the shield can be approximated as a group of diamonds, the size and orientation of which depend upon the weave angle. There will be more leakage into or out of holes with their long axes oriented circumferentially to the end of the shield than there will be if the long axes of the holes are oriented along the shield. Other things being equal, a shield with a small weave angle provides better shielding performance than one with a large weave angle.

The shield braid angle and percent braid coverage are determined in accordance with MIL-C-7078C, with a minimum coverage of 94% indicated for GSE flight deck applications. Figure 4.3

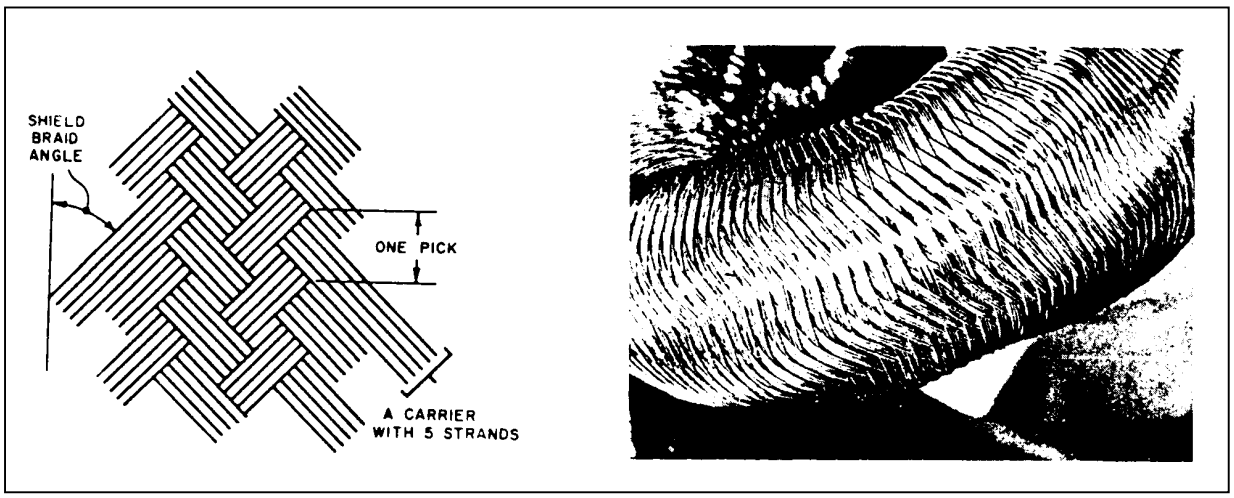

Figure 4. 3 – Typical Braid Weave Angles

shows a braided shield cable with about 85% coverage under flexing conditions.

Flexibility vs. Weave Angle

Shielding effectiveness can be improved by making the shield more dense, but that reduces the flexibility of the shield. Small diameter shields can be made with a small weave angle, but on large diameter cables the weave angle must be large to maintain flexibility. An alternative construction involves two overlapping layers of braid. Using two similar layers of braid will reduce the resistance of a single braid by a factor of two (and double the weight of the shield), and can reduce the transfer inductance by a much greater factor. Transfer inductance is the dominant impedance for frequencies above about 1 MHz and will be further discussed below.

Electric field leakage is another source of coupling via capacitive leakage through the holes in the shield. If the shielded cable is subjected to a changing electric field, dielectric flux will pass through the holes in the cable from the internal signal conductor (or from an external signal source). If coupling is from an external source, the flow of these dielectric, or displacement, currents through the external load impedances produces a voltage between the signal conductor and the shield. Noise currents flowing through the external impedance of the shield may, if the shield is not perfectly grounded, produce a voltage between the shield and any external ground structure.

Transfer Impedance of Cable Shields

As was previously mentioned, cable shielding is sometimes specified in terms of a figure of merit known as Transfer Impedance. The most informative measure of shielding effectiveness is Surface Transfer Impedance (STI) as described in MIL-STD 1377. Transfer Impedance (Z_T) is useful in assuring the isolation provided by the cable's shield primarily because of its repeatability and because it relates the voltage induced on the inside of a cable shield to a current flowing on the outside of the shield. Since the voltage drop along the cable is proportional to length, Z_T is normalized to a unit length.

Most shielding effectiveness measurement methods use radiated fields to measure the combination of reflection and absorption of field strength. Two difficulties exist with this technique when applied to cables. The first relates to the inconsistencies encountered when trying to measure field strength propagated through holes in walls. The fringing effects associated with the edge of the shield's wall hole, plus the waveguide characteristics of the hole itself, can drastically effect the viability of this technique for realistic measurements.

---

[3] ***MIL-STD-1377 (Navy), Effectiveness of Cable, Connector, and Weapon Enclosure Shielding and Filters in Precluding Hazards of Electromagnetic Radiation to Ordnance, Measurement of, 20 August 1971.***

For the cable shield case under consideration, where coupled currents over a wide frequency range can exist on the shield surface, primarily the penetration loss of the shield is the most effective. At high frequencies, the skin effect separates the differential-mode return current flowing on the inner surface of the cable shield from the coupled current flowing on the outer surface. Skin effect relates to how well high-frequency currents can penetrate conductors. Skin depth, ξ, represents the distance below a conductor's surface where the current density due to surface current flow falls to 1/e. Skin depth can be determined by:

$$\xi = \sqrt{\frac{2}{\omega\mu\sigma}}$$

where

ω = the frequency of the coupled current
μ = the permeability the conductor
σ = the conductivity of the wire conductor

The Transfer Impedance of a rigid or semi-rigid cable that uses a solid, tubular shield has the characteristic that it decreases with frequency as the skin depth becomes shallower. Transfer Impedance for this cable type is determined from:

$$Z_T = R_o \frac{(1+j)\frac{t}{\delta}}{\sinh[(1+j)\frac{t}{\delta}]}$$

where t = shield thickness

$$R_o = \frac{1}{2\pi a \sigma t}$$

R_o = DC resistance of the cable shield
where a = the outer radius of the cable shield

Standard equivalent circuits for cable capacitive and magnetic coupling were described in Figures 2.10 and 2.11 of Chapter 2. The standard equivalent circuit for a single cable and shield is one which depicts, through the use of transformers, the self inductance of both the conductor and the shield and the mutual inductance between the two. These self and mutual inductance's must be known with great precision if shielding effectiveness for the cable is to be calculated accurately without using Transfer Impedance methods. Another advantage to using Z_T is that it can be easily tested in a production environment.

When flexible shields are used, magnetic field coupling dominates, and the Transfer Impedance can be expressed as:

$$Z_T = Z_d + j\omega M_{12}$$

where M_{12} = the mutual inductance between the outside of the shield and inner conductor
Z_d = the diffusion impedance

Diffusion impedance is proportional to the DC resistance of the woven shield and diminishes with frequency.

The term transfer inductance (L_{12}) should not be confused with the mutual inductance (M_{12}) between the shield and the conductor. M^{12} depends on the physical parameters of the cable shield. For the two conductor system, mutual inductance is the shared inductance between conductors while transfer inductance refers to a conductor and its associated shielded cabling. If the resistance of the shield were zero, and if the mutual inductance between the shield and the signal conductor were equal to the self-inductance, that is, unity coupling, the flow of current on the shield of the cable would not cause any voltage to be developed between the shield and the signal conductor.

Transfer impedance is commonly used in EMP and lightning analysis work. The process and values are referenced from a TEMPEST perspective only as a means of determining with consistency the shielding effectiveness of cable/connector combinations. A number of sources are available for additional information on Transfer Impedance, the primary source is by Vance.

Non-permeable Cable Magnetic Shielding Properties

The only way a non-permeable metal cable shield can prevent penetration of an external H-field into the shielded volume is by generating an opposing magnetic field of the same strength but opposite in direction. This situation exists when the shield forms part of a closed loop, as shown in Figure 4.4, allowing the induced current to flow.

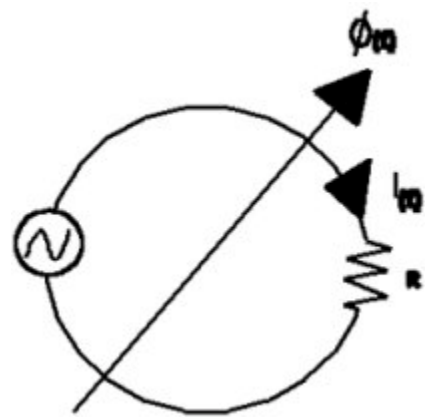

Figure 4. 4 – Flow in Loop

The induced current created its own magnetic field, which opposes the incident field and creates a null

[4] *Jerse, Thomas, Application of Shielded Cables, RF Design, January, 1991.*

[5] *Vance, E.R., Coupling to Shielded Cables, Chapter 3, John Wiley and Sons, New York, 1978.*

inside the cable. Lenz's Law states that the field produced the loop will oppose any change in the external field. The issue here is nulling a sine wave with another sine wave 90 degrees out of phase, which is impossible. The solution is to shift the phase of the second sine wave until cancellation occurs.

Phase shifting can be done by making the loop resistance very low. If loop resistance is high, the induced current is small (equal to induced EMF divided by R) and also proportional to the rate of change of the incident magnetic field (from Faraday's Law of Induction). That would produce a null. If resistance is low, the loop current is larger, and the induced magnetic field may be nearly proportional to the incident magnetic field so that nulling can occur.

The response of a closed inductive loop to an external sinusoidal flux passing through the loop results in the EMF due to the external field being diminished by the amount of EMF caused by the loop current, to arrive at a resultant EMF which would drive current around the loop. The resultant equation is:

$$\frac{d\phi}{dt} - L\frac{di}{dt} = iR$$

The first term is induced EMF from the external field (Faraday's Law of Induction). The second term is the EMF due to loop self inductance. The iR quantity is the resultant voltage developed across the loop resistance. Loop resistance could be distributed around the loop, or it could be a discrete, localized resistor for ease of measurement. For the purpose of this analysis, knowledge of flux direction is unimportant, so other combinations of algebraic signs would also work.

Now let R go to zero and assume that the excitation is sinusoidal. For this condition, Equation 4.5 simplifies to:

$$i'(t) = \phi'/L$$

Equation 4.6 can be rearranged and written as $\Phi' = i'(t)\,L$. Loop current is in phase with the impinging magnetic flux. The flux produced by the loop current also happens to be $\Phi' = iL$ and the two equal fluxes are in opposite directions, so that the total flux passing through the loop is zero. The cancellation of fluxes through a hypothetical closed loop goes a long way toward reducing fields very near the loop, and explains the shielding process of magnetic fields in cables.

Now suppose in Equation 4.5 resistance R is non-zero, and that $\Phi(t)$ and $i(t)$ are sinusoidal functions with frequency $\omega = 2\pi f$ (f is in hertz). It can be shown that the amount of flux cancellation will depend on both R and L.

If $R \ll \omega L$, then induced EMF is drastically reduced. If $R \gg \omega L$, then induced EMF is not significantly reduced. In terms of shielding effectiveness, as the frequency of the impinging noise field is increased through the RF range, the requirement for a low R is gradually relaxed and magnetic shielding becomes easier. As frequency is decreased into the audio range, R may have to be so low as to be unattainable and shielding effectiveness disappears.

This analysis is applied to the loop formed by a cable braid and a ground plane. EMF on the coax inner conductor will track the braid EMF. As the EMF on both is reduced, the desired shielding is achieved.

For the real world case of non-uniform magnetic fields near a cable shield, the non-zero fields integrate out to a total of zero over segments of a coax, so that the total EMF can be zero. The whole shielding concept works only if all loop inductance is coincident with the portion of the loop where the total EMF is to be zero. (the shielded cable from end to end). Any other inductance, such as the inductance of a pigtail termination at the end of the cable braid, will degrade shielding effectiveness.

Limitations of Shielding Conductors

For low frequency isolation, shields must be connected to the structural ground plane at only one end to prevent the flow of current through the shield as a result of small differences in the voltage potential of the ground plane at each end of the shield. The shield and center conductor form a one-turn coaxial transformer. Interference or problem causing currents flowing through the shield induce an interference voltage in the center conductor. The one end shield grounding philosophy is only satisfactory for solving low frequency interference problems, and conflicts with the requirements for high frequency shielding. Note that most direct TEMPEST radiated problems result from high frequency signal leakage, while ground loop TEMPEST coupling problems occur when shields are connected at both ends.

The shield must be connected to the structural ground plane through extremely short jumpers at many points along its length in order to prevent the existence of an ungrounded length of shield greater than one-tenth wavelength long at the highest frequency of interest. An ungrounded shield or shield grounding conductor greater than one-tenth wavelength long has a considerable impedance to the structural ground plane. Any potential appearing on the shield as a result of capacitive coupling from other conductors, or as a result of voltage drops due to interference ground currents flowing through the shield will be both radiated and capacitively coupled into the cable's center conductor. This subject is further examined in the chapters on interactive grounding.

High currents flowing through the shields due to wiring resonances will induce an interference voltage in the center conductor through the mutual inductance. This shield grounding philosophy is only satisfactory for isolating high frequency interference problems, and conflicts with the requirements for low frequency shielding.

The conflicting requirements of high and low frequency shield grounding techniques prevents the application of a simple panacea to solve all grounding problems. Each circuit must be individually analyzed. In cases where satisfactory operation requires optimum shield grounding throughout the frequency spectrum, isolated multiple shields may be used, with the outside shield grounded through extremely short jumpers at frequent intervals, and the inside shield grounded at one point only.

Conventional non-ferrous shielding braids are not effective magnetic shields, but work well as electrostatic shields at low frequencies. Most metallic materials are satisfactory shields against both electric and magnetic fields at the higher frequencies.

Minimum Practical Cable Lengths

It is impossible to achieve worthwhile signal radiation improvement factors unless the twisted or shielded portion of the cable is at least an order of magnitude longer than the total untwisted or unshielded cable length. System interconnection cables must be considered in conjunction with the related internal cables of the assemblies. Most wiring wholly internal to an assembly does not involve long enough conductors to provide a useful improvement factor.

Shielded Wire or Cable Design Guidelines

Regardless of how cable shielding is determined, certain basic techniques or guidelines should be followed. The guidelines below are simple rules to follow when designing and specifying shielded wires or cables.

1. For good E field shielding it is necessary to:
   A. Minimize the length of a center conductor that extends beyond the shield
   B. Provide a good ground on the shield.

2. A shield placed around a conductor and grounded at one end has no effect on the magnetically induced voltage in that conductor.

3. To prevent H field radiation from a conductor forming a ground return loop between both ends, the conductor should be shielded and the shield should be grounded at both ends.

4. For maximum noise protection at low frequencies, the shield should not be one of the

signal conductors. Also, one end of the circuit must be isolated from ground. At low frequencies, large noise currents are induced in ground loops.

5. Braided shields should be terminated uniformly (circumferentially) around the braid at the connector for best isolation.

Chapter 5

Connectors and Their Characteristics

Reducing Cable Termination Perturbations With Connectors

Connector/cable assemblies are used throughout virtually every electronic system. Not only are assemblies used to interconnect boxes, but as can be seen in Figure 5.1, cable/connector assemblies are used many places at the box level[1]. The figure shows at least three connector types used inside typical box assemblies. Vertical stacking connectors facilitate parallel board-to-board mounting, with plug height often changing to accommodate different board spacing.

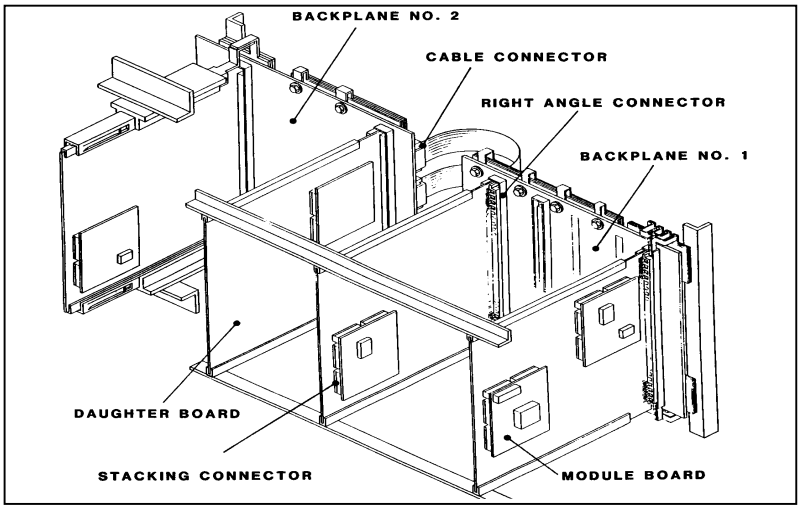

Figure 5. 1 - Box Level Cable/Connector Assemblies

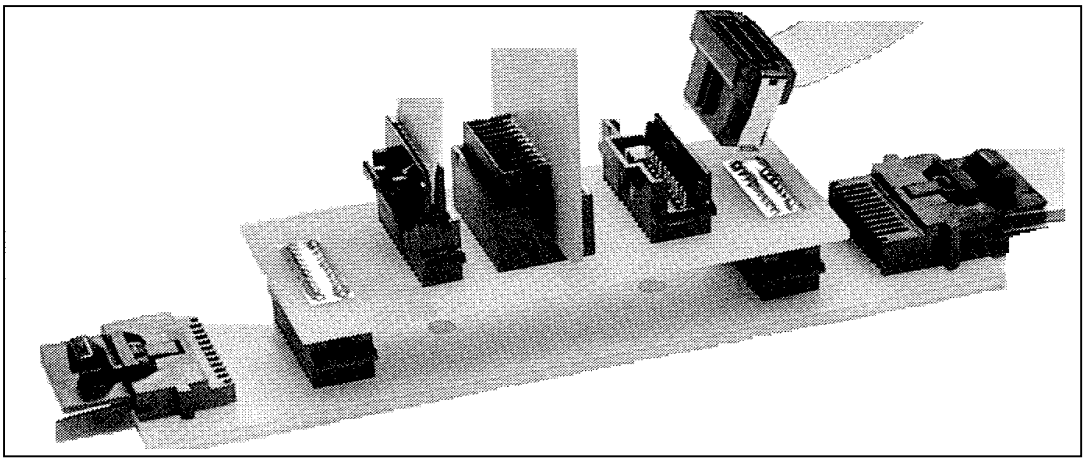

Figure 5. 2 – Various Cable Connections

[1]*Mellios, J., High-Density Micro-Strip Connector Family Boosts Digital Speeds for Supercomputing, ECN Magazine, November 1990.*

Right-angle board-to-board connectors are normally used to connect daughter boards to backplanes. The connector is simply a right angle receptacle which mates with the same male plug used in the vertical stacking connector.

Various cable-to-board connectors, as shown in Figure 5.2, are used to terminate multi-pin ribbon cables, such as those inside computers. This cable connector type comes in various configurations. However, regardless of connector type, the design thrust in new hard wire cable and connector systems is to provide the capability for increased signal speed while at the same time decrease cable and connector size and packaging costs. Digital pulses with subnanosecond rise times have considerable high frequency content, which in turn demands careful control of impedance discontinuities within the transmission line system.

In order to maintain the needed control, while also increasing signal throughput, designers have often adapted their conventional connectors by committing a large number of signal pins to function as ground connections. Another approach to maintain control has been to carefully control the dimension, spacing, and dielectric properties of the connector/pin assembly. While each of these techniques enhance the ability of a cable and connector combination for signal transmission, the same approaches also work to reduce the escape secure emissions from the assembly. However, since the design thrust is on cross channel coupling reduction, even the best crosstalk noise reduction techniques can be compromised if outside signals can couple into the cable system.

The use of standard connectors and normal manufacturing processes produce cable assemblies with untwisted or unshielded conductors extending back from the cable ends for distances as great as six inches (typically three inches). An example of a standard shielded cable and connector assembly is shown in Figure 5.3. Figure 5.4 shows a shield connector employing a crimp approach

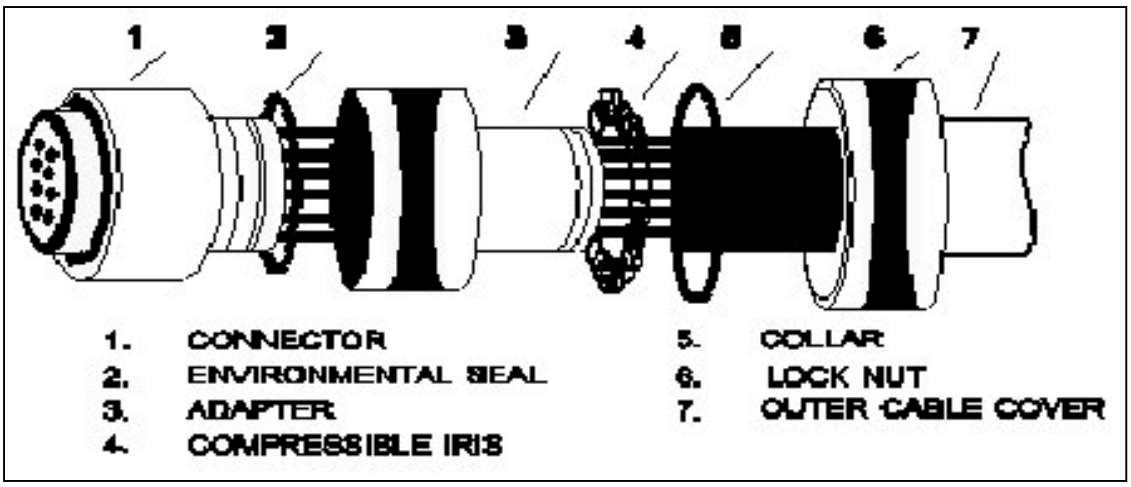

Figure 5. 3 - Standard Shielded Connector and Cable Assembly

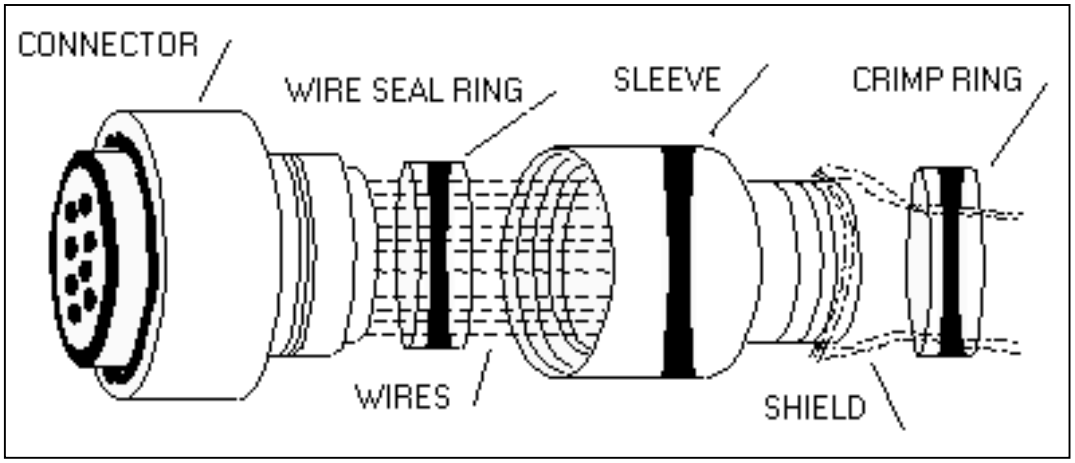

Figure 5. 4 - Shield Termination Using Crimping

to connect the shield to the backshell assembly. The unshielded conductor distances can be reduced to minimal distances with a reasonable manufacturing effort, but the expenses involved are often excessive.

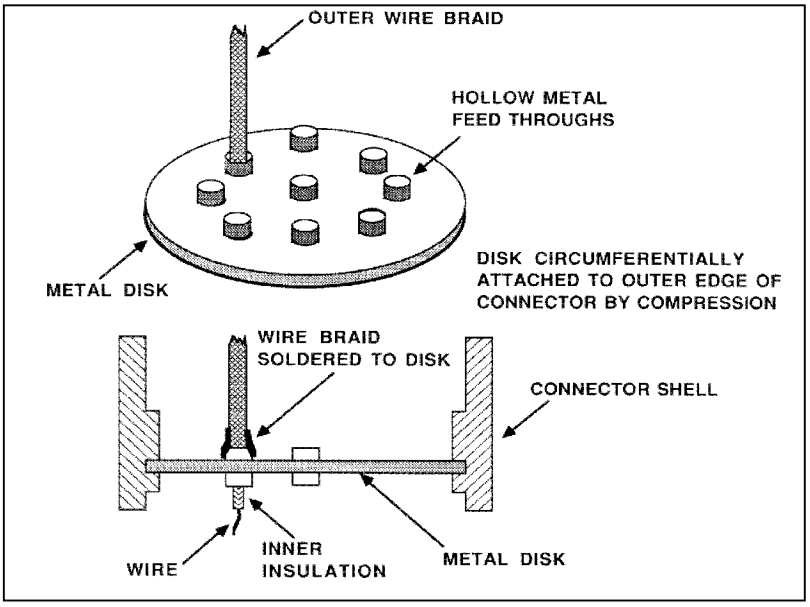

Figure 5. 5 - Disk Type Shield Termination

One inexpensive approach with shielded cables is to use a disk type connector termination as shown in Figure 5.5. Individual shields are circumferrentially terminated on the disk that in turn is mounted within the connector shell.

A typical SMA coaxial connector used for an attenuator is shown in Figure 5.6. Coaxial connectors are supplied in a variety of types and sizes depending on their specific application, power, cable size, and frequency requirements. Related to frequency, the available operating frequency range decreases as the connector size increases. For example, the standard SMA series connectors are usable to 18 GHz while the N series is limited to 11 GHz.

There are six categories of microwave connectors. To prevent abrupt impedance transitions, cable size is the primary factor influencing connector choice. The six categories are ultraminiature, microminiature, subminiature, miniature, medium and large. Table 5.1[2] lists dimensional ranges and cable types for each category.

Table 5.1

Type	**Diam.(mm)**	**Example**
Ultra.	**3.96**	**3.5mm**
Micro.	**6.35**	**SMB, SMC**
Sub.	**7.9-11.1**	**SMA**
Min.	**14.3-16.6**	**BNC, TNC**
Med.	**19-25**	**N, SC**
Large	**31.75**	**QC, LT**

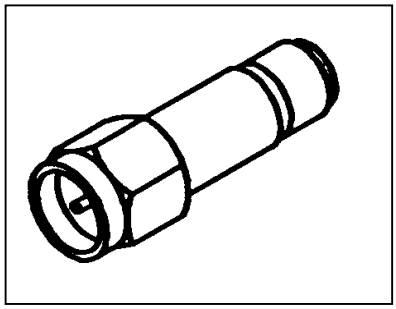

Figure 5. 6- Typical Coaxial Type Connector

Relative size comparisons for each of the four primary connector types are shown in Figure 5.7[3]. The type N connector is about three times the size of the BNC, and, as with the type TNC, must by screwed down rather then a simple twist lock mechanism.

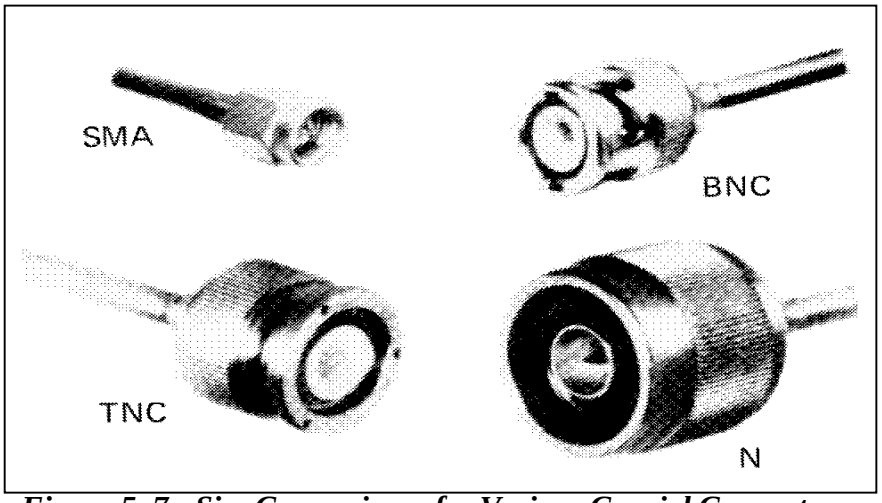

Figure 5. 7 - Size Comparisons for Various Coaxial Connectors

Applications for BNC coaxial connectors are shown in Figure 5.8 and SMAs in 5.9. The BNC connector is the most commonly used connector in medium frequency test laboratory applications.

---

[2]*Laverghetta, Thomas S., Microwave Measurements and Techniques, Artech House, 1976.*

[3]*Laverghetta, Thomas S.*

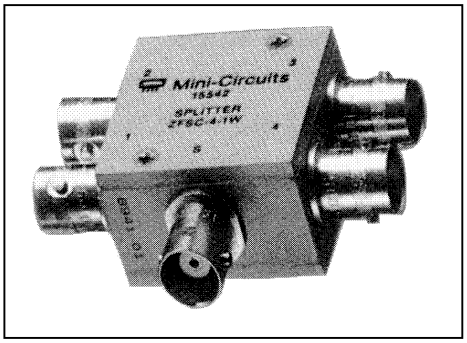

Figure 5. 8- BNC Connectors Installed on a Typical Box

It is designed to be easily removed and re-connected many times during its life without significant degradation.

Type SMA connectors are smaller than the standard BNC, and are used for higher frequency applications. They are often supplied with semi-rigid cable and gold plated pins for low loss.

The microwave/RF type coaxial TNC connector is usually rated to about 18 GHz, is similar in size to the BNC, but is not intended to be removed and re-connected many times.

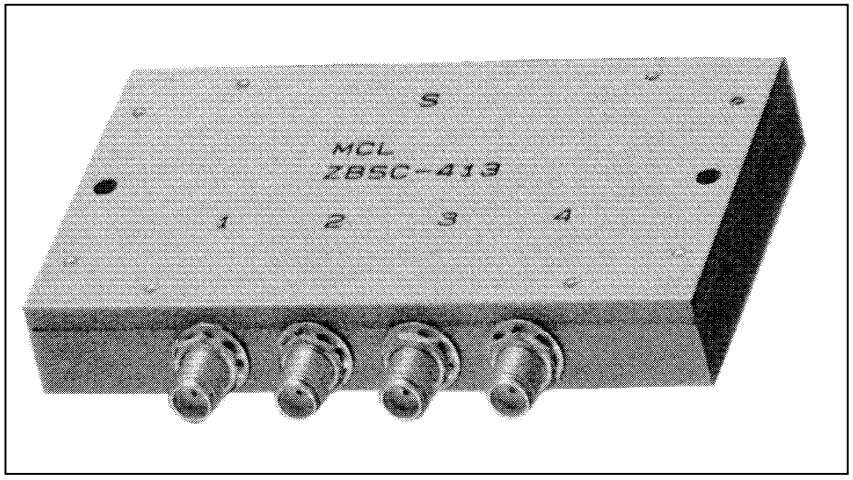

Figure 5. 9 - Power Splitter With SMA Type Connectors

For mounting BNC, TNC, and N coaxial type connectors, the outer cable cover is pealed back to expose the inner shield. The connector edge is then pushed between the shield and the inner nonconductive wire coating. Finally, either a crimp lock or a screw down fastener is used to push the cable shield firmly against the connector assembly. Figure 5.10 shows the inner assembly of a crimp attached BNC type connector.

Perturbations in the shield braid can be eliminated in many connector types simply by specifying connectors with conductive shell finishes, and by incorporating provisions for attaching the shield braid to the connector shell in the manner similar to that used with radio frequency coaxial type connectors. Conductor twist perturbations can be eliminated except for the actual lengths of the

connectors pins. The use of appropriate connector shell materials also provides additional magnetic and electrostatic shielding.

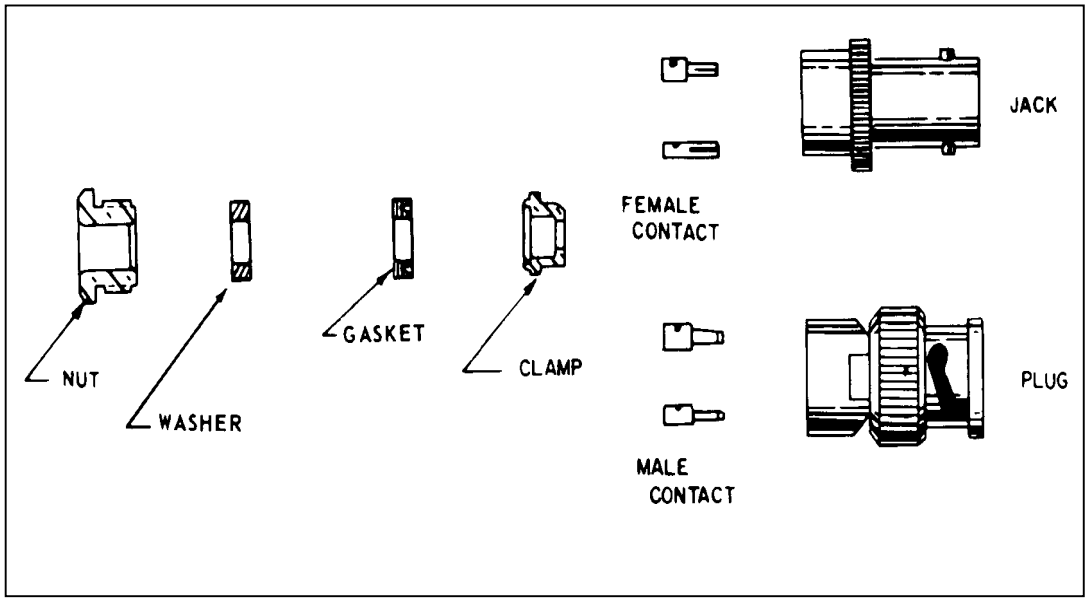

Figure 5. 10 - Crimp Type Connector Assembly

Connector Transfer Impedance

The transfer impedance of a cable connector or splice can be represented by:

$$Z_T = R_o + j\omega L_{12} \qquad \textbf{5.1}$$

where R_o is the resistance measured across the connector and L_{12} is a transfer inductance between the external shield circuit and the internal conductors of the cable. The value of Z_T is usually not calculable, but it can be measured along with the shielded cable by passing current through a cable sample containing the connector and measuring the open circuit voltage induced on conductors inside the shield. The transfer impedance of a connector is a lumped element in the cable circuit, in contrast to the distributed nature of the transfer impedance of the entire cable shield.

Transfer Impedance Effects of Ground Connections for Connectors

The transfer parameters refer only to the properties of the connector itself. Additional transfer impedance may be produced by the manner in which the cable shield is connected to the connector

or by the manner in which the cable connector is mounted to a bulkhead. Even slight inattention to connection assembly or treatment details may introduce into the circuit values for transfer impedance far greater than the impedance of the connector or possibly far greater than that of the rest of the cable shield.

Shield Braid Ground Conductor Limitations

The shielding effectiveness of a shield braid is dependent on the existence of a low impedance shield return to an efficient ground plane. Long shield ground return conductors convert the shielded wires into unintentional coupling capacitors or transformers (due to inductance) at the higher frequencies. Shield braids should be considered as an extension of the shielding structure and must be connected directly to the nearest primary ground structure, the connector in most cases. Figure 5.11 shows a bulkhead feedthrough and grounding connector for converting from a micro miniature mQ jack to a BNC jack.

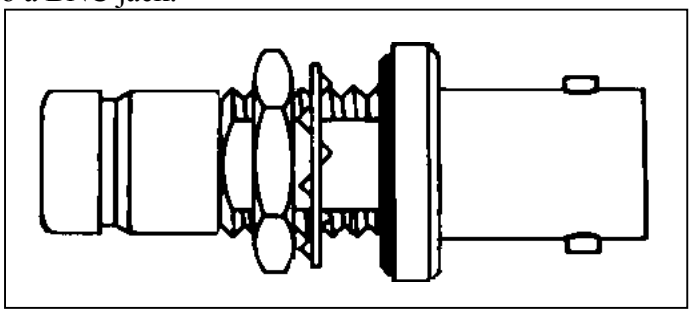

Figure 5. 11 - Typical Bulkhead Feedthrough and Grounding Connector

A shield grounded at one end has a fundamental resonance at the frequency where the sum of the shield length and the shield ground conductor length is equal to one-half wavelength. The shields also develop harmonic resonances at multiples of these frequencies. Center conductors have similar resonant frequencies, but these resonant frequencies will be affected by the terminating impedance connected to the ends of the center conductors.

At resonance, a single point grounded shield develops a high impedance at its open end. Relatively low currents will produce high voltages across this high impedance. The high impedance point is coupled to the center conductor through the mutual capacitance of the shielded braid and the center conductor. At these frequencies, the reactance of the mutual capacitance becomes so low that a virtual short for high frequency exists, and spurious coupling losses are negligible.

The multipoint grounded shield at resonance develops an extremely low series impedance. Relatively low power levels and voltage differentials will produce large current flows in the shield. This large current flow is coupled through the mutual inductance of the shield and the center conductor, producing a large induced voltage in the center conductor. At these frequencies, the mutual inductance produces such tight coupling between the shield inductance and the center conductor inductance that a virtual short circuit at high frequency exists, and spurious coupling losses are negligible.

Even at frequencies below the point where the shield and wiring are the classical one-tenth wavelength long or less, the reactances are quite significant, and the spurious coupling losses are too small to provide useful isolation. A more practical upper limit would exist at the one-thousandth wavelength frequency. Based on this criteria, most practical lengths of wiring might be affected above the mid-audio frequency region. Long cables might be affected in the low audio frequency and power frequency regions.

General Cable Termination and Connector Guidelines

The following design considerations are relevant in the application of shielded cables and connectors to aircraft platforms.

1) Cabling penetrating the case should be shielded and the shield terminated in a peripheral bond to the case at the point of entry.

2) Cable shield grounds should be maintained separate from any signal grounds or circuitry grounds.

3) Cable shields should be bonded peripherally to adapter and connector shells; cable shields should <u>not</u> be "pig-tailed off" and run through on connector pins.

4) Connectors should be of the type which make peripheral shield (shell) ground before the pins mate during the process of connection. The pins should disconnect before the shield (shell) separates.

5) Pins of connectors leading to electronic circuitry should be, wherever possible, female. Otherwise, they should be recessed male pins so as to exclude contact with any portion of the shell of the mating connector or with operator fingers.

6) Connector backshells should be selected such that they do not degrade the shielding effectiveness of the entire cable harness assembly.

Composite Connectors

There has been significant interest recently in the use of conductive coated plastic or composite connectors. Such connectors are relatively inexpensive to manufacture, are lightweight, and can be reconfigured by simply changing a mold.

For many secure applications, particularly when other requirements such as EMP and lightning protection are not imposed, the conductively coated connector is acceptable. This is especially true for low level signal lines, and for connections inside shielded housings. One problem which could be encountered for external applications is shielding breakdown when exposed to continued manipulations or other movement.

Signal Radiation Through Poor Connector/Cable Bonds

Probably the most commonly treated concern in TEMPEST cable design is the leakage of electromagnetic radiation of information via poor cable/connector interfaces. In this section, a few related problem areas normally overlooked will be evaluated. Usually, if a properly shielded cable radiates energy, either there is a common mode noise current flowing in the shield, or there is a leak somewhere in the cable/connector assembly. There are many potential sources of leakage problems: the cable and connector may be poorly bonded, the cable shield may be poorly terminated, the reference signal lines may not be carried through the connector properly, and so forth.

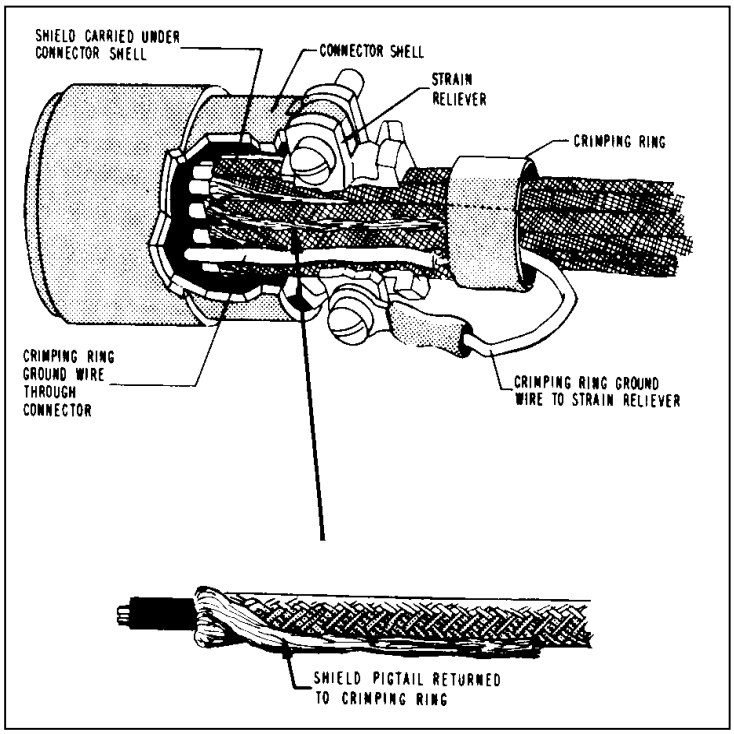

Figure 5. 12 - Braid Shield Attachment Using Crimping

Figure 5.12[4] shows the proper way to connect a common airborne braid shielded cable via crimping to the connector assembly. Figure 5.13[5] shows an enclosed crimp type connector, and a

---

[4]*AFSC Design Handbook DH 1-4, Electromagnetic Compatibility, Air Force Systems Command, January 1977.*

[5]*NAVAIR AD 1115, Electromagnetic Compatibility Design Guide for Avionics and Related Ground Support Equipment, Naval Air Systems*

crimp type mounting to an equipment chassis wall. Notice the pigtail ground wire in 5.12. Pigtails will be discussed later. The added impedance from drain wires will convert high frequency energy to common mode currents. To enhance shielding capabilities, there are many types of foils and braids available, with the shielding effectiveness different for each type.

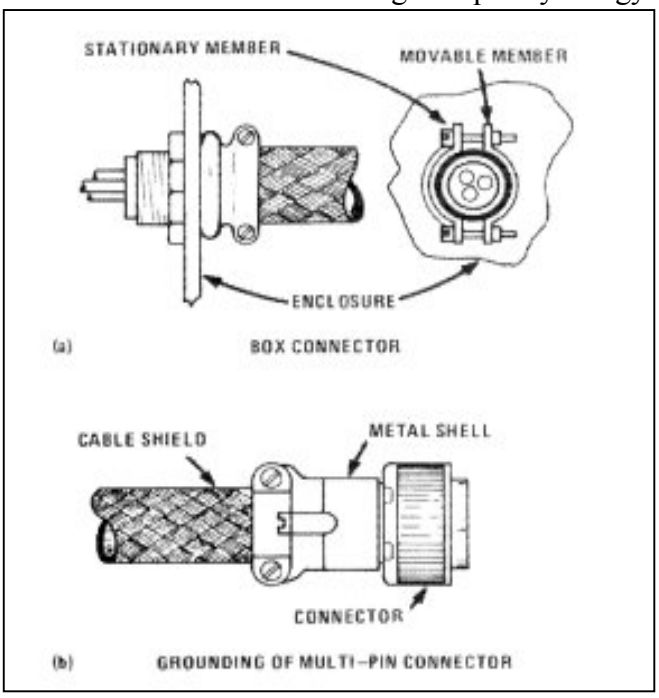

Figure 5. 13 - Proper Grounding of Crimp Type Connectors/Cables to Structure

Shielding effectiveness of cables is also frequency dependent, so the switching frequencies of each signal must be considered in individual cable selection. Connector selection also becomes important at this level because often a filtered connector will eliminate many unnecessary frequencies from the switched signal before they can propagate down the cable.

The connector, specifically the shielded connector, is considered an integral part of the cable assembly. Poor connectors or connector/wire shield terminations will significantly degrade the assemblies shielding effectiveness. Often, the connector's attachment to the wire shield is initially solid, and breaks down with vibration or aging. In general, cable shields should be attached a full 360 degrees to the connector, and not tied through a pigtail or drain wire as shown in the computer connector assembly of Figure 5.14.

Pigtail Grounding

A common commercial procedure for attaching a shield at a connector is to insulate the shield with tape and connect it to the back shell through a pigtail.

An equally common commercial practice, although disappearing due to FCC regulations, is to insulate a panel connector from a panel with an insulating block and to ground the panel connector either to the panel through a pigtail or, more commonly, to an internal ground bus. An often used treatment of a shield at a connector, shown in Figure 5.15[6], is for the shield to be connected

---

Command, 1988.

[6]***Fisher, F.A., Plumer, J.A., Perala, R.A., Lightning Protection of Aircraft, Lightning Technologies Inc., Pittsfield, MA, 1990.***

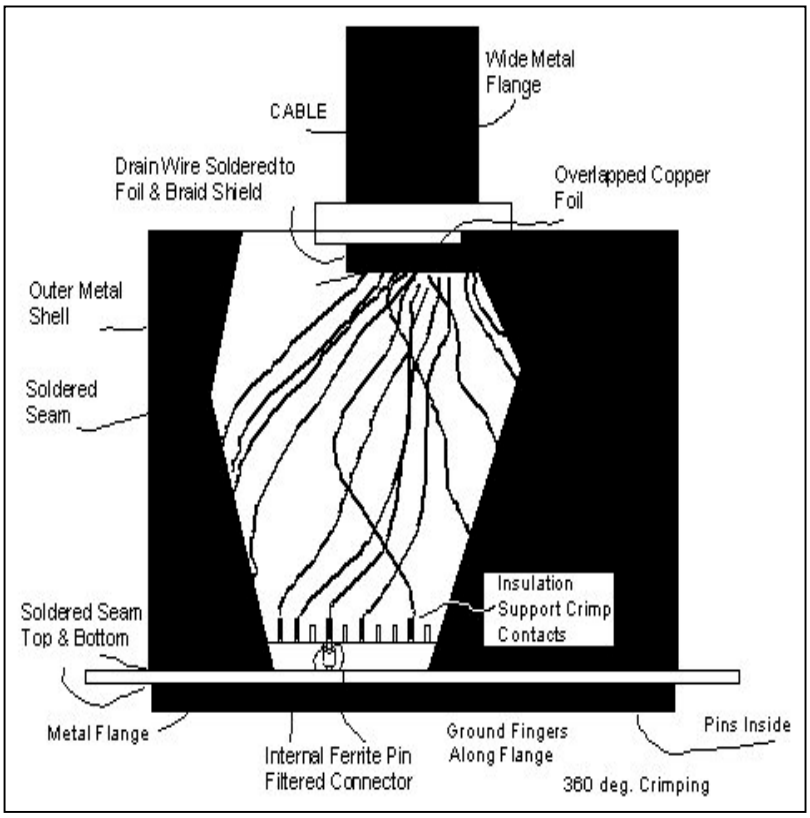

Figure 5. 14 - Standard Shielded Computer Cable and Connector With Drain Wire

connector pins and grounded internally through a pigtail, either to the panel or to an internal ground bus.

Many other termination methods involving pigtails are shown in Figure 5.16. The potential for coupling that will be introduced through the use of pigtail grounding is best evaluated in terms of the self impedance of the conductor or braid used for the pigtail, and the mutual inductance between the pigtail and the exposed length of signal line conductor in the connector.

As has been previously stated, current flow on internal cable signal wires produce a related current flow in the shield through mutual inductance and capacitive coupling. This current flowing through the self-inductance of the pigtail produces a voltage V = jωL. This voltage can, in addition to producing a voltage in other conductors inside the connector shell through mutual inductance, radiate to adjacent outside conductors.

The self inductance of a straight conductor of non-magnetic material can be determined from:

$$L = 2 \times 10^{-7} \left[\ln \frac{2l}{r} - \frac{3}{4} \right] \qquad \textbf{5.2}$$

where l = length
r = radius of wire

Above a ground plane, as shown in Figure 5-17, the equation changes to:

$$L = 0.2 \ln \left(\frac{4h}{d} \right) \qquad in \frac{\mu H}{m} \qquad \textbf{5.3}$$

where h = height above the ground plane
d = conductor diameter

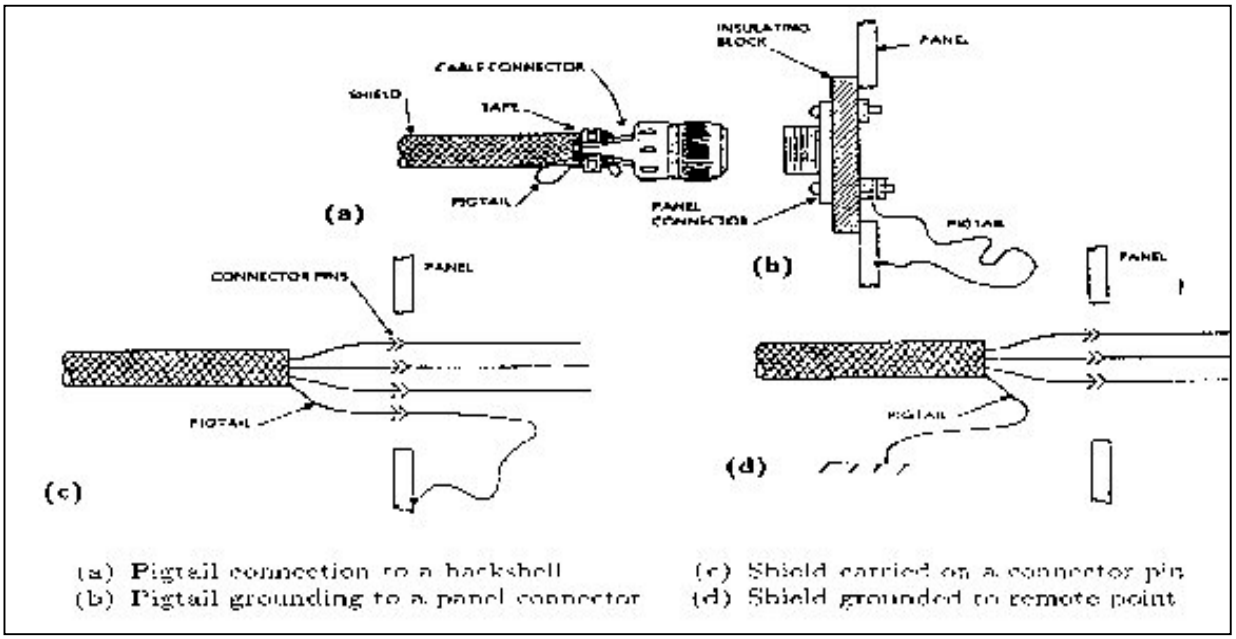

Figure 5. 15 - Common Treatment of Shields and Pigtails at Connector Interfaces

Also, in the vicinity of a ground plane, capacitance exists between the conductor and ground plane, with air as the insulating body. This capacitance can be determined from:

$$C = \frac{55.56}{\ln(\frac{4h}{d})} \quad in \frac{pF}{m} \qquad \textbf{5.4}$$

$$Z = 60 \ln(\frac{4h}{d}) \qquad \textbf{5.5}$$

Inductance and capacitance also define the surge impedance of a conductor. The velocity of propagation on such conductors is 300 m/µs, the speed of light.

When the shield is terminated in a pigtail wire, these same equations for wires can be applied directly. For this case, the mutual inductance between an internal signal line conductor and a pigtail, provided the distance separation, d, is less then the exposed length, l, is:

$$M = 2l\,[\ln \frac{2l}{d} - \frac{d}{l} - \frac{d^2}{2l} + \frac{d^3}{4l} \ldots] \qquad \textbf{5.6}$$

The inductance of a typical pigtail will not be significantly different even if it is twisted and not straight. However, regardless of approach specified, pigtails have little application in the TEMPEST environment, since they negate the low impedance connection required between the shield and first ground reference.

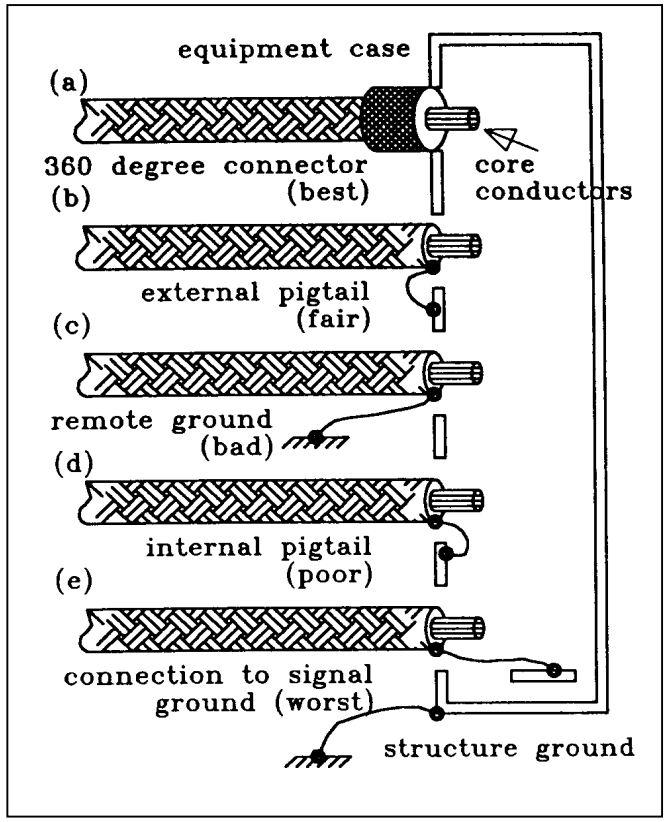

Figure 5.16 – Various Pigtail Connection Approaches

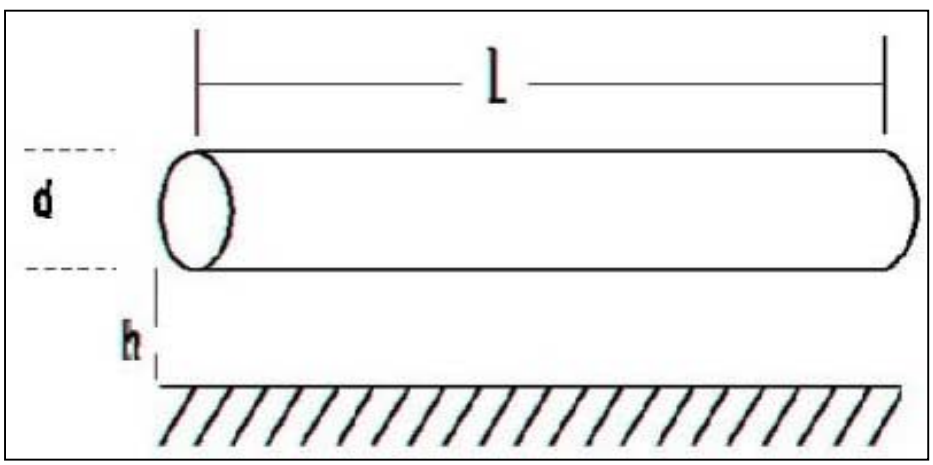

Figure 5. 17 - Wire Above a Ground Plane

Chapter 6

Controlling Conductor Problems with Ribbon or Flex-Print

Return Lead Filter Requirements

Electronic hardware leads are usually grounded to the structural ground plane through various techniques. High frequency circuit returns are generally connected directly to an assembly structure which is in turn bonded to the main structural ground plane. Returns connected to a well designed high frequency assembly structure rarely exceed a length of one inch, and normally have a negligible inductive reactance below one hundred megahertz. Conventional circuit returns are generally isolated within the component, carried through an interface connector, and grounded through some other length of conductor to the main structural ground plane.

The inductive reactance of the short jumpers used to connect high frequency circuitry to a structural return path is negligible at the TEMPEST problem frequencies generated by most pulse, square wave, and transient generation components. Since the return path impedance is so low, and the voltage developed across this path is therefore negligible, a true single ended circuit is created throughout the compromising frequency spectrum. In this case, a return path filter is not required for differential mode signal reduction.

Balanced and Floating Circuits

The return conductors of balanced circuits and floating circuits have the same lengths and inductive reactance as the "hot" conductors. If filters are required in the "hot" conductors, filters are also required in the return conductors. Balanced line-to-line filters require a structural ground plane reference through a capacitive (or inductive) center-tap to eliminate common mode interference. An ungrounded filter capable of eliminating line-to-line interference is not capable of eliminating line-to-ground plane interference due to the lack of radio frequency continuity between each line and the ground plane.

Single Point Ground Circuits

The return conductors of circuits referenced to a single point are essentially floating circuits throughout the interference frequency spectrum. The return circuit conductors, measured between the component connector and the appropriate ground studs, have varying lengths as previously stated. These lengths have appreciable reactance, producing significant voltage drops throughout the frequency spectrum generated by most pulse, square wave, and transient signals.

Again for this reason, if filters are required in the "hot" conductors, filters are also required in the return conductors. The "hot" conductor, and the return conductor which is returned to a single point ground, must be treated as a floating circuit that requires a balanced filter with a center-tap referenced to the structural ground plane.

Crosstalk Controls

A common problem in the TEMPEST design of cables and wiring is crosstalk. By crosstalk we mean the coupling of a signal from one conductor to another due to its close physical proximity. When coupling occurs in the secondary conductor, it may again couple or re-radiate to other conductors, and/or it may cause the secondary conductor's signals to indicate erroneous messages.

There are a number of recent articles in the literature that treat the phenomenon of crosstalk in general, and for specific cable types. Since crosstalk is primarily a problem of proximity, its reduction involves improving the coupling between a signal and its reference.

Some of the worst crosstalk offenders include cable connectors, printed circuit board connectors, and chip carrier or Dip package pins, primarily due to the close association of individual parallel wires within the packages. The following methods are commonly used to reduce crosstalk problems.

1. Use shielded twisted pair cables.

2. If a flat cable is used, run reference lines between signal lines. This approach can be improved if the reference lines are larger then the signal lines.

3. Minimize printed circuit line and cable lengths.

4. Route switching lines away from quiet lines. It is often acceptable to route all data lines involved in parallel bus structures together. Control, clock, and other "quiet" lines should be physically isolated from the noisy switching lines. As is also sometimes the case, noisy switching lines must be isolated from each other since crosstalk between such lines may create a longer settling time for the bus.

5. Use as many reference pins as possible in printed circuit board and cable assembly connectors.

6. Assign and isolate connector pins to take advantage of maximum isolation and separation of noisy and quiet lines. This condition is shown in Figure 6.1.

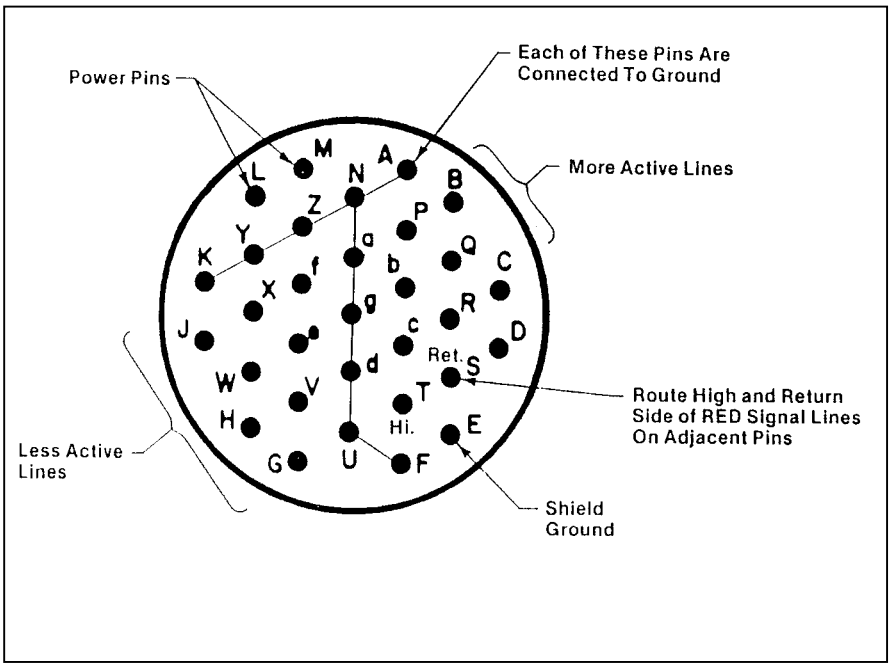

Figure 6. 1 - Connector Pin Isolation

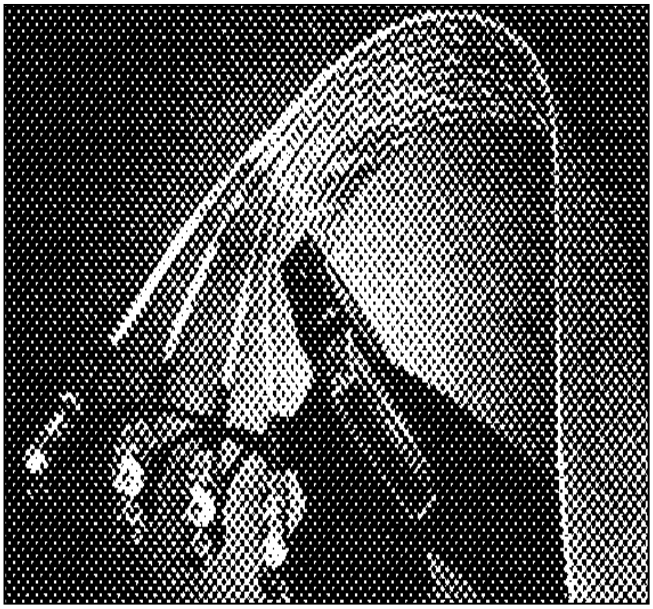

Figure 6. 2 - Ribbon Cable With Coax and Shielded Connectors

If attention to crosstalk is provided early in a design, its effects can be greatly reduced. However, if crosstalk is ignored until late in the design, the required fixes can become very costly.

Ribbon Cables

While ribbon cables are becoming the standard rather than the exception in most data processing equipment, ribbon cable manufacturers and the engineers that specify their use are also becoming knowledgeable in their proper application. Ribbon cables are now available with shields, multiple internal ground traces, and various shielded conductor types as shown in Figure 6.2. In addition,

installable shields and split ferrite cores are available to place over the internal ribbon cable. As with other cable types, the ferrite sleeve chokes off the common mode signal flowing in the cable while allowing the differential signal to pass through unaffected. Typical ribbon cable designs are shown in Figure 6.3.

Ribbon Cable Crosstalk and Radiation

In TEMPEST applications, the two major problems with ribbon cables are crosstalk and radiated emissions. Since each wire in a simple ribbon cable is exactly parallel with every other wire, distributed capacitance and mutual inductance create considerable opportunity for crosstalk.

Not only is direct crosstalk in ribbon cable experienced, but, as previously explained, sometimes the sensitive signal couples to a less controlled signal or control line and is again re-radiated at some other circuit connection point, causing even further contamination of the overall circuitry. While this problem is often controllable inside an individual shielded box, the use of ribbon cables in place of heavy shielded harnesses in composite aircraft applications represents a severe protection for not only TEMPEST, but also for EMP and Lightning protection.

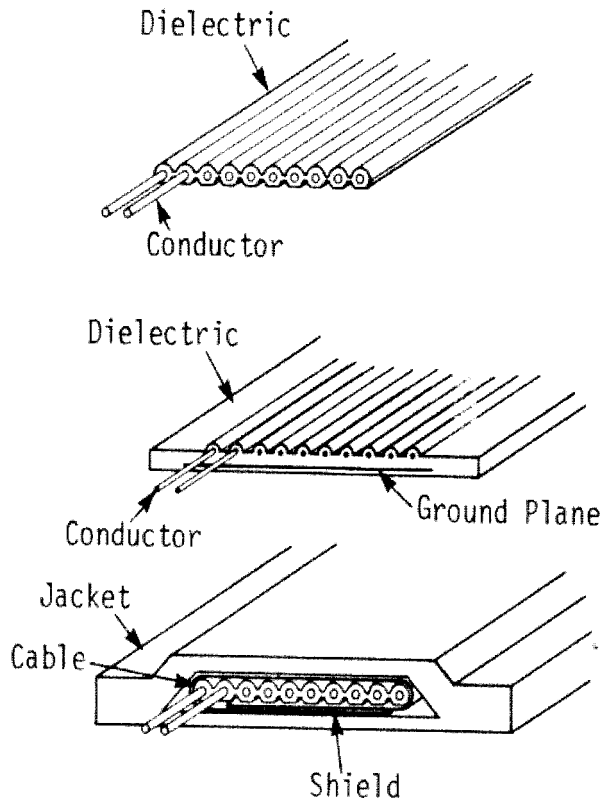

Figure 6. 3 - Typical Ribbon Cable Designs

Several mechanical and layout techniques are available that will reduce the radiated problems associated with ribbon cables. Some techniques also increase the internal crosstalk isolation. For the simple wire, radiation is affected by proximity to grounded wires. In general, a 20 to 30 dB reduction in emission level is achieved by grounding the odd numbered wires in a ribbon cable.

The following mathematical relationship, repeated from Chapter 2, describes the twist rejection resulting from twisting parallel wires within a ribbon cable. Obviously, emission characteristics are further changed when a ground plane or an outer shield are incorporated.

$$R_{dB} = -20\log_{10} < (\frac{1}{2nL+1})[1+2nL\sin(\frac{\pi}{2n\lambda})] > \quad dB \qquad \textbf{6.1}$$

where n is the number of twists per meter
L is the cable length (m)
λ is the wavelength (m)

Since twisting, adding a ground plane, or jacket shielding affect cost and signal transmission performance[1], engineering tradeoffs are necessary when selecting one method over another. Summarizing the techniques[2] to reduce radiated emissions are:

1. Reduce the spacing between individual wires by increasing the AWG wire size and reducing insulation thickness. Only a small (6 dB max) reduction in radiation is possible with this approach while crosstalk between wires is increased.

2. Join alternate signal returns together at the connector at each cable end. Multiple grounds between conductors can be created in this way, especially if signal returns are individually floated, which will reduce both emissions and crosstalk. The condition is shown in Figure 6.4.

3. Ribbon cables are available with twisted pair wires. If balanced signals are being used, twisted pairs will reduce considerably crosstalk and radiation problems.

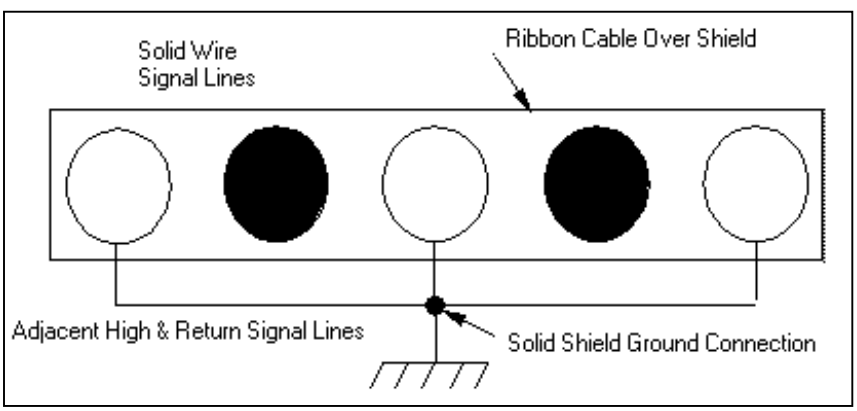

Figure 6. 4 - Alternate Grounding of Ribbon Cable Wires

[1] ***Palmgren, Charlotte M., Shielded Flat Cables For EMI and ESD Reduction, EMC Technology, Vol. 1, No. 3, July 1982.***

[2] ***White, Don, The Role of Cables & Connectors in Control of EMI, EMC Technology, Vol. 1, No. 3, July, 1982.***

4. Replace unshielded ribbon cables with shielded cables, or employ an envelope type shield over the existing cable.

5. Replace discrete ribbon cable with stripline flexprint cable. Methods available to reduce both crosstalk and shielding are shown in Figure 6.5.

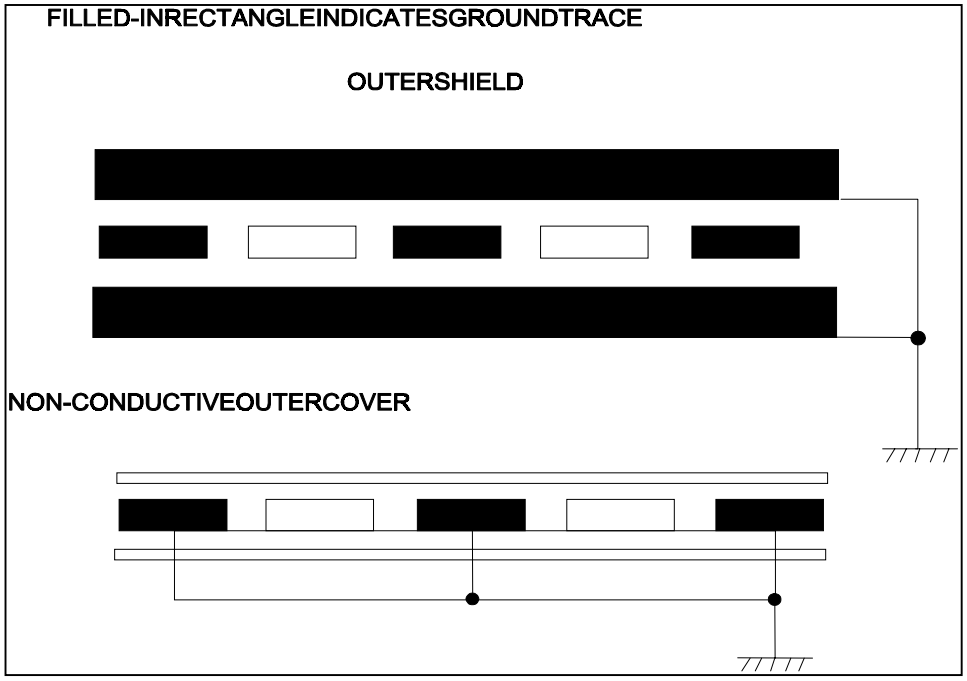

Figure 6. 5 - Stripline Flexprint Methods

Chapter 7

Local Area Networks

Computer Interconnect Systems

Hardwired systems often involve interconnecting a number of devices together such that they act as a network. Local Area Networks or LAN's as they are usually called, represent a relatively new application of personal computers in that they are truly distributive processing systems. Basically, a LAN is a system of multiple processors and support equipment all sharing a common communications medium. Processors integrated in this way can immediately interchange information, plus any user can share the resources (printer, I/O device, etc.) of any other user on the net.

Depending on the Government contractual requirements imposed, security of the net can be provided in the form of emission control, encryption, physical protection, or a combination of each. In many cases, the equipment of an entire facility is networked, with security requirements, including controlled access, imposed outside the building. Since normal commercial building practices do not easily lend themselves to network security measures, this section will concentrate on LAN protection as can be applied during or after installation of non-encrypted equipment in a commercial facility.

Distinguishing Features of Local Networks

Currently many acronyms describe computer networks. The Local Area Network (LAN) is the most popular, but networks are also called Local Computer Networks (LCN), Local Networks (LN), Local Area Computer Network (LACN), and Personal Computer Local Computer Network (PCLCN). Basically all these acronyms are describing the same technology: local communications technology.

For communications to take place between various equipment, three basic requirements must be met. First, there must be some data rate at which communications can take place during transmission. For the personal computer network, the transmission rates involved are typically between 2.4 Kbps and 10 Mbps.

The second distinguishing characteristic for communications is the transmission media, the kind of wire and cable over which signals are sent. For personal computer networks, twisted-pair cable and coaxial cable are the most popular, depending on the signal transmission rate and the size of the net. Typically, most LAN's extend from 100 feet to about 1 mile.

The third characteristic, and the primary distinguishing feature among the various network equipment suppliers, is the switching technology needed to switch from one point on the network to another. Protocols are a component of the switching mechanism used normally handled by hardware using VLSI technology. Protocols are known as communications software, and is a software layered on top of the other network mechanisms.

Topologies

Two types of systems exist, open and closed. Open systems are essentially systems which are built or configured to a published specification or standard. Closed systems are completely proprietary, and require a formal gateway to interface into some other system.

Various topologies, how the computers will be physically interconnected, have evolved for both open and closed system implementations. Figure 7.1 shows the common topology schemes for personal computer LAN's.

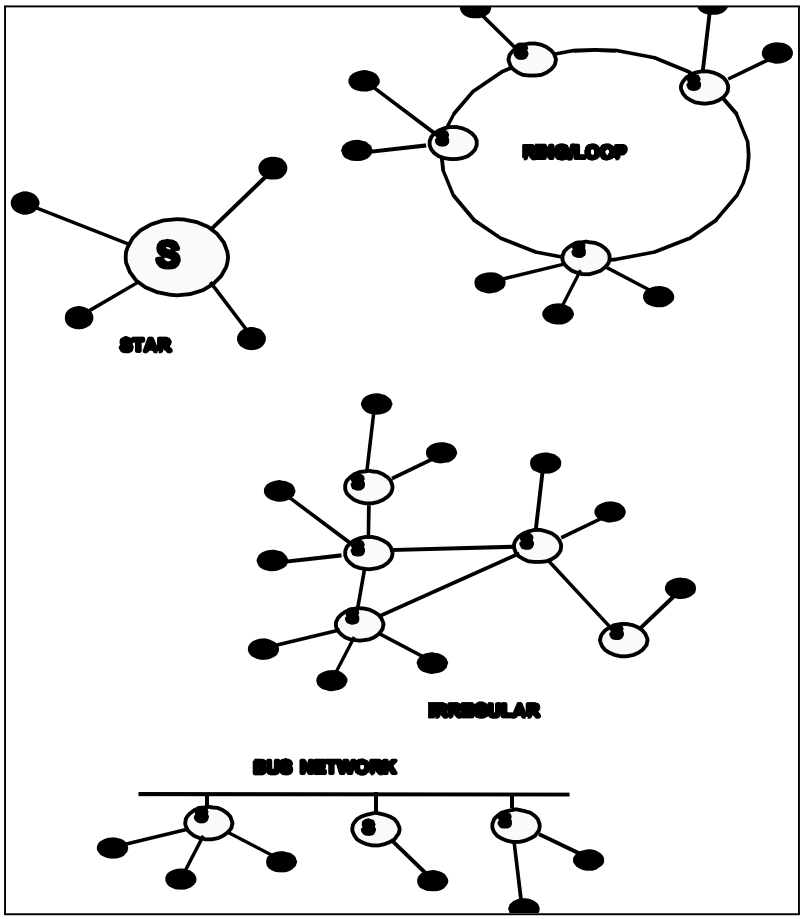

Figure 7. 1 - LAN Topologies

A star network has as its central element an "S". The switching technology employed in the star network resides at the center of the star, with all nodes located on the perimeter as shown in Figure 7.2. Since all communications go through the center of the star, TEMPEST requirements for the protection of unencrypted channels are necessary for this element.

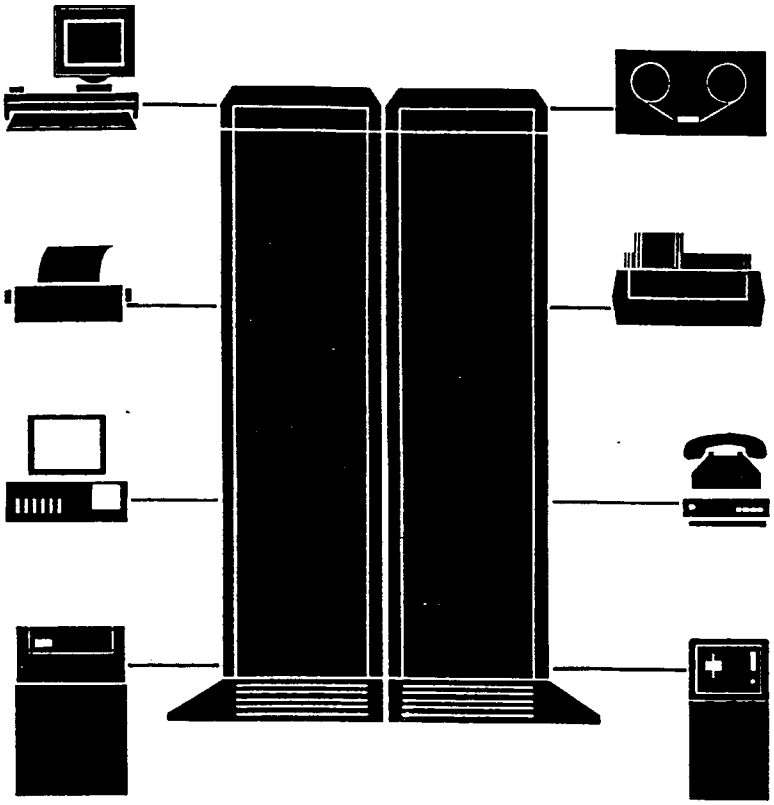

Figure 7. 2 - Data/Voice Star LAN

In the majority of cases, TEMPEST suppression on the central element is not employed. The central element is usually located within a shielded enclosure, and individual nodes are located within a Secure Compartmented Information Facility (SCIF). However, unless all the individual personal computer nodes are located in a shielded area, and unless the wires connecting each node are physically and emission protected, there is a strong potential for compromise, either through crosstalk or through emissions outside the TEMPEST Protected Radiation Zone, to occur.

The ring network, or loop shown in Figure 7.3, has switching elements distributed along the ring, with nodes connecting to each element. The figure shows a system employing a common protocol technique called token passing. Instead of a bus contention scheme (listen before talking), some kind of token is used, and whoever has possession of the token actually gets to talk if they so desire.

The ring network is a more flexible system then the star, but is also much more difficult to TEMPEST protect. The primary problem relates to the distribution of the net. Again, unless encryption and TEMPEST techniques are employed at each node, the entire network must be located inside a SCIF and shielded from the outside world.

There are two other significant TEMPEST problems inherent with this topology. The first relates to distributed grounds. Since ground potentials differ at nearly every location along the ring, common mode ground loops are created among the various nodes connected, thus greatly reducing the emission controls implemented at each node. The condition is shown in Figure 7.4.

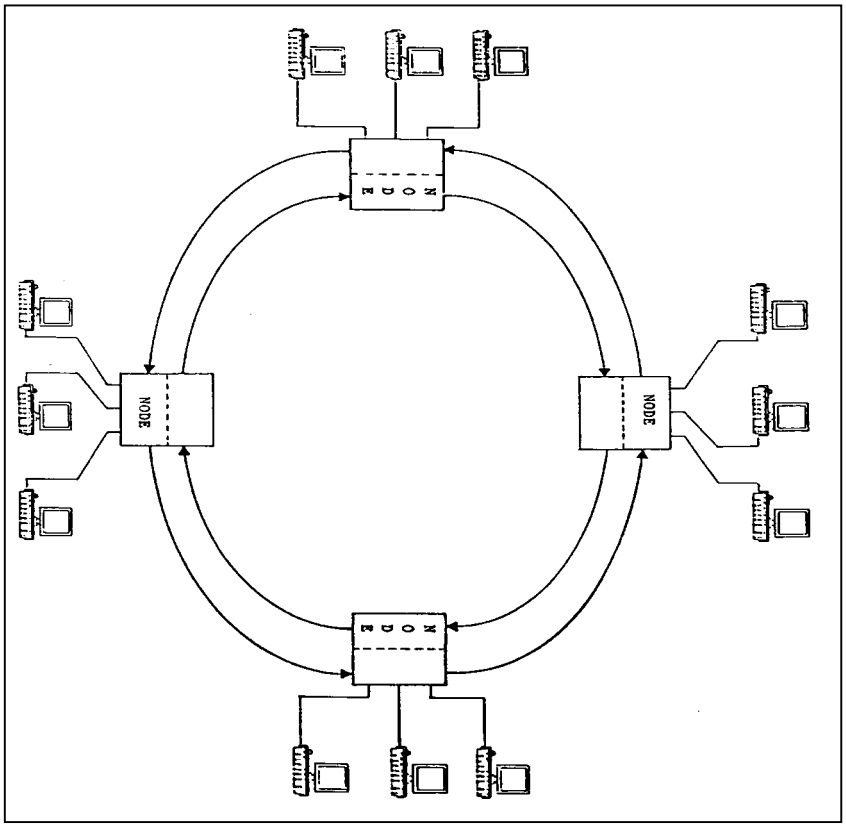

Figure 7. 3 - - Typical Token Ring LAN

The second problem relates to the twisted wire itself. Differential line drivers are prone to the effects of offset voltages. Therefore, twisted wire by itself does not reduce the transmitted signal sufficiently to eliminate radiated TEMPEST problems. In addition, since the ring might be large with several nodes, wave shaping and using shielded twisted pair might represent too much loss for the network to operate properly. Line drivers and receivers for hardwired systems will be discussed in Chapter 8. Fiber optic cabling can eliminate the ground loop security problem with ring networks, but hardwired ring networks are seldom used in TEMPEST only security applications. The typical secure application with this approach is to employ encryption at terminals where security is desired.

The third popular LAN strategy is the bus. Branches are located at various points along the cable, as shown in Figure 7.5. Of interest in this topology is the security capabilities and the generic (and ground controlled) interface using an interconnect control mechanism. Essentially, each node is independent, and can be connected or removed without effecting the other devices.

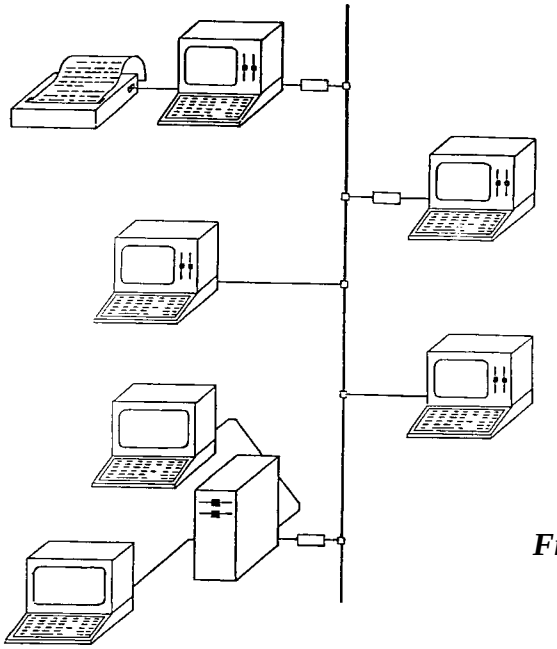

Figure 7. 4 - Linear Ethernet LAN

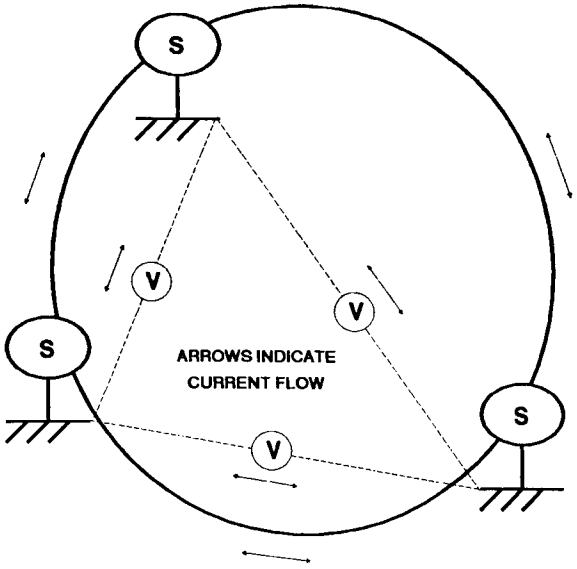

Figure 7. 5 - Ring Lan Showing Ground Loops

Both TEMPEST secure and regular nodes can interface, inside and outside the shielded area. In addition, both fiber optic and TEMPEST secure coaxial cabling is available to support this form of topology, as are encrypting devices.

Linear Ethernet Systems

Hardwired and fiber optic TEMPEST accredited Ethernet bus type systems are available and currently being used in a number of secure network applications. Linear Ethernet systems employ a low-level access protocol which controls who actually gets control of the network at any one time. Called Carrier Sense Multiple Access, collision detection is used to handle contention (control) for the network. Basically, the node continually listens and waits until no one else is talking before it sends its message.

On an Ethernet communications network, information is transmitted and received in Manchester encoded packets or frames. An Ethernet frame consists of a preamble, two address fields, a type field, an information field, and a frame check sequence. Each field has a specific format. An Ethernet frame has a minimum length of 64 bytes exclusive of the preamble. and a maximum length of 1518 bytes also exclusive of preamble. An Ethernet frame format is shown in Figure 7.6.

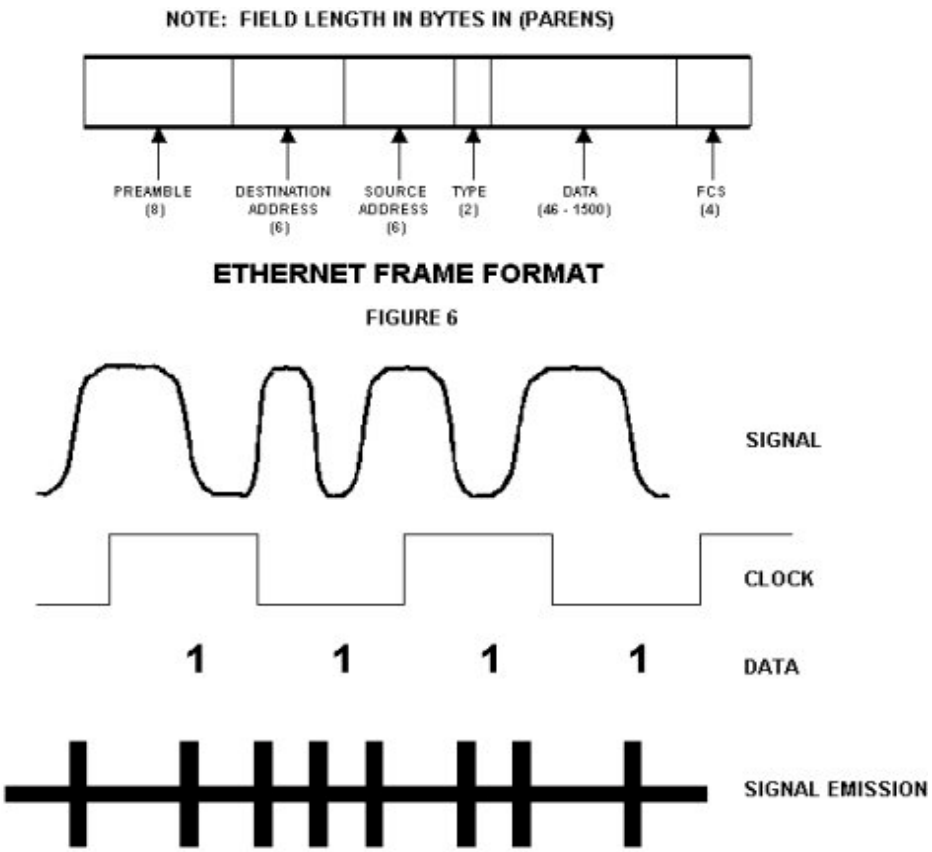

Figure 7. 6 - Manchester Coding in a Secure Ethernet LAN

Of interest to the TEMPEST engineer is the encoding technique used to transmit data, the bandwidth requirements on the TEMPEST receiving system, and the inherent design of the Ethernet transmit circuitry.

Manchester encoding (or phase encoding) is a method of encoding the data in such a way that the clock signal can be recovered from the serially transmitted data without the need of a separate clock channel. The idea is to introduce phase shifting in a carrier wave which is continuously switching, such that logic input changes are represented by a phase shift of the carrier. The transmitted signal is forced to make a transition at the center of each data bit. Logic "1" is transmitted by a 0 to 1 transition and "0" is transmitted by a 1 to 0 transition.

As an example, a high state 1 is encoded as a zero phase shift, with a low state represented by a 180 degree phase shift from reference. Two successive high or low states indicate either a positive or negative transition of the data input. Data resynchronization is achieved at the receiver by using

a phase-locked loop that tracks the encoded signals.

The intended data and encoded signal is also shown in Figure 7.6. As can be seen, emission information related to state changes in Manchester encoded signals is more difficult to identify then with normal bursted ASCII type coding.

A second difficulty in identifying Ethernet signals is the bandwidth requirements imposed on the equipment used to look at the signals. Since the bursted pulses can be at 10 MHz rates, a wide bandwidth oscilloscope with memory is needed just to evaluate the signals that are radiated or conducted. Normally, a 400 MHz bandwidth memory scope is necessary.

The third advantage of Ethernet is the inherent harmonic control of the transmission circuitry. In order to prevent ringing along the entire cable length during a data and/or collision burst (the bus contention signal) the waveform's rise and fall characteristics have been suppressed about 80 db above the third harmonic. When the signal is transmitted over the coaxial cable, very little energy escapes to radiate to the outside world.

LAN Security Philosophy

Whenever many individual devices are interconnected to form a network, the security of the entire network is much the same as the individual link in a chain. Any one component can cause a compromise, no matter how much protection is provided to the rest of the system. Referring back to the bus system of Figure 6.5, some pc are connected to the system via a COMSEC access box. Since the data traversing the bus is encrypted, there would no system compromise as a result of signal line leakage or common-mode and ground loop coupling. However, unless the individual pc is also TEMPEST protected, the sensitive signals on the bus can still be detected in the vicinity of the receiving or transmitting pc interface.

Protecting the entire network involves the consideration of three design factors. First, each individual component in the network must be protected, either as a separate TEMPEST secure device, or through SCIF or vault isolation. Second, the hardwired paths between each component must be protected by encrypting, emission shielding, or physical isolation (which could include facility shielding). The third factor involves the power and ground system used in the facility (see Chapter 6).

LAN Security Verification

Related to non-COMSEC TEMPEST security, they’re two common approaches to verifying the security of a Local Area Network. The first of these represents the application of NACSIM 5100A to both box and system level configurations. The objective with this approach is to satisfy TEMPEST criteria for an undetermined number of possible configurations with a discrete number

of equipment and/or system level tests at a TEMPEST test laboratory prior to installation. Testing in this lower level configuration must consider ground loops and intra-system susceptibility for both test chamber measurements and field-testing.

In order to meet TEMPEST objectives for initial test laboratory accreditation, the proper approach is to first perform scan testing to determine a worse case configuration prior to actual system level accreditation testing. Additionally, the underlying assumption for TEMPEST testing is that equipment to be accredited at the system level must first have met box level accreditation requirements.

The worse case configuration for lab testing should include at least one of each equipment type, should provide for a possible ground loop failure to occur between terminal interfaces or powerlines, should evaluate connector problems which might appear when the network equipment is improperly connected or removed, and should provide for the evaluation of possible standing waves and antenna effects along the transmission line. If the network is an Ethernet LAN, there is the requirement for grounding the coaxial cable at only one end if the network is to meet TEMPEST emission criteria.

The second philosophy for verifying the security of local area networks is to perform TEMPEST field tests after the network has been installed. When this approach is used, related security considerations such as the inherent shielding of the facility or location where the equipment is installed can enhance the protection otherwise provided by individual equipment.

LAN Conclusion

Local Area Networks are emerging as the true distributed processing communication system of the future. Secure networks, utilizing protected facilities, private security devices, COMSEC Type 1 or Type 2 devices, or TEMPEST emission controlled devices represent a major challenge to the TEMPEST design engineer related to grounding, power distribution, shielding, facility implementation, emission control, and systems integration. However, assuming all the proper TEMPEST design techniques have been implemented at the box and the overall facility level, there is still an element of uncertainty involved when putting the system together. This problem represents the final major challenge to the TEMPEST engineer who must certify the security of the system. The results and suggestions presented herein should aid in this effort.

References

Gabrielson, B.C., R & D Testing Ethernet Systems, Technical Report, Comsearch Applied Technology, Herndon, VA, 1985.

The Personal Computer Local Networks Report, Architecture Technology Corporation, Minneapolis, MN, 1985.

Chapter 8

Interfaces and Transmission Lines

Introduction to Secure Transmission Lines

The intent in a secure environment is to reduce or prevent sensitive signals from escaping the controlled area either through common-mode coupling paths into the ground and/or power system, or by radiating to the outside world. While shielding and controlled access might work as a bulk approach, and although opto-isolators work to reduce common-mode coupling, in the majority of cases networks and systems are simply built as needed, with security controls applied as they become necessary.

One of the greatest sources of system generated emissions escaping a security controlled medium is through cable radiation associated with improperly terminated transmission lines. Regardless of whether the cable is short, such as between a keyboard and a pc, or long, such as a hardwired twisted pair network, wires are never matched at all frequencies, and some level of reflected signals and associated standing waves nearly always exists. This chapter examines primarily interface circuits, focusing on transmission line theory, interface cabling, and transceiver interface design. The goal of this discussion will be to provide guidance for the system designer in reducing the potential for leakage of secure emissions as a result of improper line driver/receiver designs, while at the same time maintaining interface signal specifications.

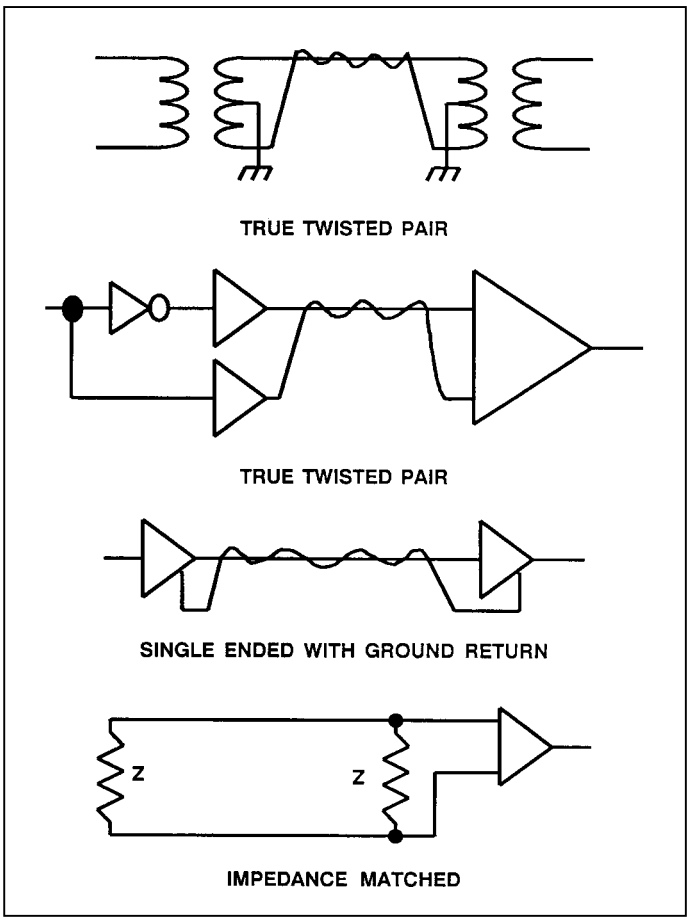

Figure 8. 1 – Transmission Line Techniques

Transmission Line Theory

Systems are connected to one another via transmission lines. There are three interface components making up the standard hardwired transmission system, the line driver, the transmission line itself, and the line receiver. The transmission line is usually a single wire, coaxial cable, parallel wire, or twisted pair. Signals are transmitted over the interface using single ended or differential techniques as shown in Figure 8.1.

Looking at a forward traveling wave on an interface transmission line, the voltage can be represented at the input as:

$$V_{D=0} = \Re V_f \, e^{(j\omega t)}$$

where f represents the forward direction, and D represents location. The corresponding forward traveling wave at a later time and position can be represented as:

$$V_D = \Re V_f \, e^{j\omega(t - [\frac{D_f}{v_{(0)}}])}$$

where $v_{(0)}$ is the velocity of the wave, and ω is the radian frequency. Similarly, a backward (b) traveling wave at position D can be represented as:

$$V_D = \Re V \, e_b^{j\omega(t + \frac{D_b}{v_{(0)}}]}$$

Combining equations (8.2) and (8.3) gives an expression for a conductor with two traveling waves moving in opposite directions:

$$V_D = \Re e^{j\omega t} \, [V_f \, e^{-j\omega\{\frac{D_f}{v_{(0)}}\}} + V_b \, e^{j\omega\{\frac{D_b}{v_{(0)}}\}}]$$

Calculating the corresponding current at position D gives the following expression:

$$I_D = \Re \frac{e^{j\omega t}}{z} \, [V_f \, e^{-j\omega\{\frac{D_f}{v_{(0)}}\}} - V_b \, e^{j\omega\{\frac{D_b}{v_{(0)}}\}}]$$

$$V_D = V_f \, e^{-jBD_f} + V_b \, e^{jBD_b}$$

Here z is the impedance of the conductor (at position 0). The negative sign is due to a backward propagating wave, while current, by convention, always flows in the forward direction. Equations (8.4) and (8.5) show the variation of voltage and current with time and with distance

along the line. The real part of $e^{j\omega t}$ is cos ωt. If the rms value of either the voltage or current is considered instead of the instantaneous values and if a phase constant is defined as B = ω/υ, then the above equations can be simplified as follows:

$$I = \frac{1}{z_{(0)}} [V_f e^{-jBD_f} - V_b e^{jBD_b}]$$

These two equations represent the variation of the rms values with distance along the line. These variations are called standing waves.

The input impedance of the transmission line can be derived from the equations above if the input boundary is defined at -l, or z = -l. The l (= l) in the equation is the same as D above.

$$Z_{(-1)} = z_{(0)} [\frac{e^{-jBl} + \rho e^{jBl}}{e^{-jBl} - \rho e^{jBl}}]$$

The reflection coefficient, ρ, is an important parameter in the understanding of power transfer. That is, the reflection governs the transfer of voltage and current from the sending end to the receiving end of a transmission line. The reflection coefficient of a load (L) impedance when given a characteristic impedance for the line can be found from:

$$\rho = \frac{Z_L \ z_o}{Z_L + z_o}$$

where z_o is the characteristic impedance and Z_L is the load or terminating impedance.

It is relatively easy to see that if the cables are infinitely long, or if they are terminated in their characteristic impedance, then $Z_{(L)} = z_{(0)}$, and ρ goes to zero.

Going back to the expression for input impedance (equation (8.8), the equation can be written in terms of the reflected wave from load end $Z_{(2)}$ in the sine cosine form as:

$$Z_{(1)} = z_{(0)} [\frac{Z_{(2)} \cos Bl + jz_{(0)} \sin Bl}{z_{(0)} \cos Bl + jZ_{(2)} \sin Bl}]$$

Formula (8.10) is absolutely correct. However, if the numerator and denominator are both divided by cos Bl, the equation again reduces to a simpler form:

$$Z_{(1)} = z_o \left[\frac{Z_2 + jz_o \tan Bl}{z_o + jZ_2 \tan Bl} \right]$$

A second useful expression for describing the transmission line characteristics is the voltage standing wave ratio. If the two traveling waves from equation (8.6) are examined closely, it appears that the first term becomes more negative while the second term becomes more positive in phase as $z_{(0)}$ increases. At some value $z_{(0)}$, the two terms will be in phase and the voltages in the forward (f) and backward (b) direction will add, giving a maximum voltage. At a distance of one quarter wavelength, the voltages will be out of phase and will subtract, giving a minimum voltage.

$$V_{SWR} = \frac{V_{(\max)}}{V_{(\min)}} = \frac{V_{(f)} + V_{(b)}}{V_{(f)} - V_{(b)}}$$

The voltage standing wave ratio can now be defined in terms of the absolute (pos) values of the maximum and minimum voltage values as:

$$V_{SWR} = \frac{1 + \rho}{1 - \rho}$$

The reflection coefficient is defined as $\rho = V(b)/V(f)$, and is always less then 1 except for open or short lines. Therefore, the voltage standing wave ratio can be written in terms of the reflection coefficient in the following equation.

Notice what the previous analysis implies to a TEMPEST designer. Specifically, the reflection coefficient increases with impedance mismatch, and a large coefficient implies a large V_{SWR}.

While large standing waves might not create a problem for normal data transfer, the resultant radiated emissions create the potential for TEMPEST compromises over a very large bandwidth. One way to reduce the standing waves is through impedance matching, but this is impossible for all frequencies of interest. Therefore, lets take a look at cable and line driver/receiver parameters to discover if some simple solutions to Red line interface problems are achievable.

Cable Characteristics

The resistive component of a transmission line over a short distance is relatively small when compared to the input impedance of the line receiver in a typical application. Distributed capacitance, however, will combine with the resistive component to produce a RC time constant

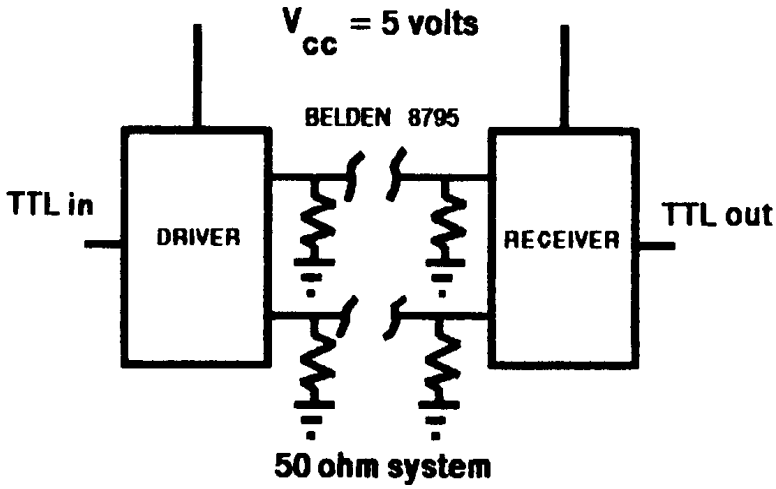

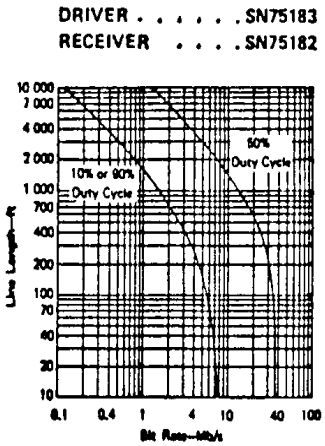

Figure 8. 2 – Curves for Line Driver & Receiver Combination (Belden 8795 Cable)

that degrades the waveform of the digital transmitted signal. The higher the capacitance, or the longer the transmission line, the more the signal is rounded off or otherwise degraded. Cable line capacitance per foot is a good indication of the usefulness of the transmission line to individual applications, and is generally available in the cable manufacturer's specifications.

In addition to cable capacitance, other restrictions on cable line length include signal bit rate, duty cycle, bit width, and receiver sensitivity. The maximum bit rate per length of transmission wire is a function of the bit width and duty cycle of the data stream. For the line driver and receiver combination of Figure 8.2, the maximum bit rate that can be transmitted over 100 feet of Belden #8795 twisted pair cable {z(o) = 100 ohms, C = 15 pf/ft, propagation delay = 1.3 msec/ft) at a 10 % or 90 % duty cycle is approximately 7.5 Mb/sec, whereas the maximum bit rate for a 50 % duty cycle is approximately 37 Mb/sec. The 5:1 ratio between 10 % and 50 % duty cycles is reflected in the 5:1 ratio in the curves of Figure 7.2. Additionally, the required signal bandwidth is approximately equal to the inverse of the bit width, which is determined from the data rate and duty cycle of the transmitted signal.

What is immediately apparent from the above information is that commercial system or network transmission line cabling is produced for maximum rather then minimum data transfers. In other words, there is sufficient capacity in standard interface cabling that a significant amount of additional capacitive and resistive loading can be added to a relatively short transmission line before the intended data transfer is interfered with. By carefully evaluating the proposed line driver characteristics, a good idea of how much loading to add can be determined.

Line Driver Characteristics and Wave Shaping

Important line driver characteristics are output impedance, output peak current capability, and frequency response. The output peak current capability and frequency response can be obtained from the manufacturer's specifications. To reduce reflections, the driver's output impedance should equal the characteristic impedance of the transmission line with the receiver attached. Not only should the impedance match at the intended frequency, but significant impedance matching or line damping should continue to the higher frequency range where square wave harmonics can cause transmission line reflections. This could mean the addition of variable impedance loads such as ferrites or capacitor banks.

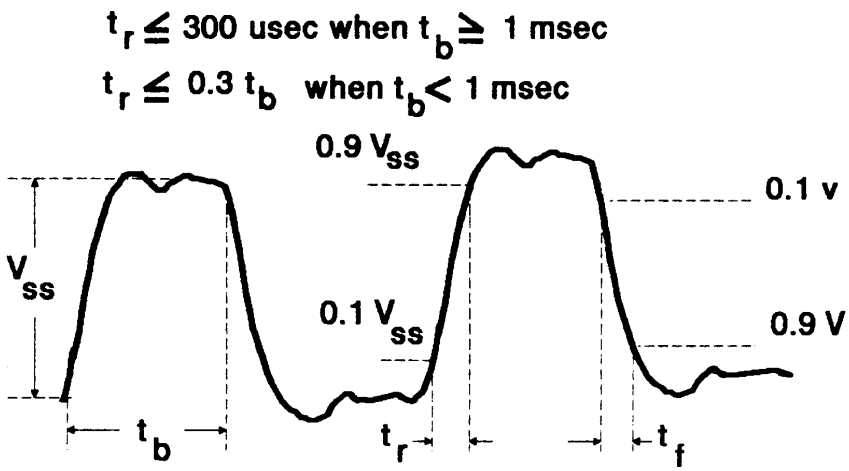

Figure 8. 3 - EIA Standard RS-423-A Wave Shaping

For the design Engineer, the line driver's circuitry is most important because that is where wave shaping techniques are employed. Wave shaping at the driver involves controlling and smoothing the signal rise time, which, in effect, decreases the reflection produced at the impedance mismatch, and controls the amount of signal crosstalk to adjacent lines. Again, it is important to note that resultant standard output waveforms must conform to the applicable interface specification levels such as those listed in EIA Standard RS-423-A (see Figure 8.3). While significant flexibility for wave shaping is provided by this specification, some special applications, such as those specifically intended to enhance TEMPEST emission control, do not necessarily need to conform to the standard specification. Most importantly, dedicated secure systems can usually conform to whatever is necessary for them to be operable.

There are two types of wave shaping, linear and exponential. Linear wave shaping is used for rise times of 100 usec or more, while exponential is used for faster rise times. Both linear and exponential can be accomplished directly on many standard line drivers, and can also be

accomplished using DIP RC filters. DIP type RC filters will be discussed following the section on practical line driver/receiver designs.

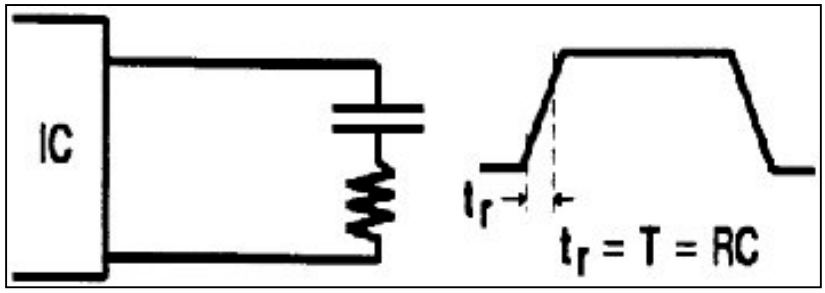

Figure 8. 4 - Exponential Wave Shaping

Considering direct wave shaping on the driving device, Texas Instrument's uA9636AC is a dual line driver with adjustable slew-rate (wave shaping input) for both RS-232-C and RS-423 applications. The wave shaping control is provided to both the line drivers through one input pin. For linear wave shaping, a resistor is connected between the wave shaping control pin and ground which can control the output to almost straight line rise and fall times.

For exponential wave shaping, a series resistor and capacitor (Figure 8.4) are normally connected between the control pin and ground with the resultant RC time constant tuned to the desired response.

Wave shaping can be accomplished on line drivers with no built-in wave shaping capability by applying controls to the drivers output, or, in the case of Op-amp type drivers, by adding feedback to bandwidth limit. The wave shaping circuitry added to a standard line driver is similar to the RC control mentioned above with either dissipative (RL) or reflective (LC) designs. The added circuitry is placed between the driver's output and the transmission line, and is considered as a part of the driver's output impedance.

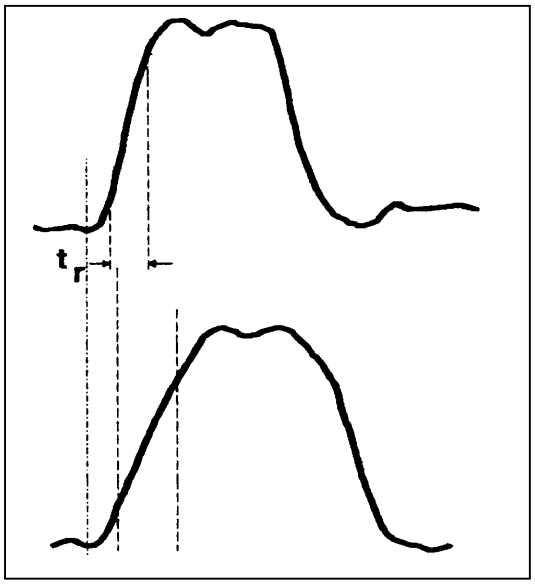

Figure 8. 5 – Drastic Rise Time Changes Can Occur

Some interfaces, such as edge triggered receivers, require special wave shaping. For edge triggered devices, it is important not to round off the signal beyond the maximum signal rise time required by the receiver. Notice in Figure 8.5 that even a slight change in signal rise time can drastically effect the real time of occurrence when the minimum turn on voltage for the device to switch states is reached.

Line Receiver Characteristics

A line receiver has five primary characteristics of interest to system designers: input impedance, sensitivity, hysteresis, and input threshold. Designing a line receiver for the first of these characteristics, input impedance, is fundamental to the reduction of reflected signal noise. Figure 8.6 shows a transmission line with characteristic impedance $z_{(0)}$ and a line receiver with an input impedance of $Z_L = R_L$.

As previously described, if the load and characteristic impedance are not equal, power incident on the line receiver will be reflected. In most cases, the designer is required to match the characteristic impedance of the line with an additional impedance which satisfies the equation below:

$$Z_{(L)} = \frac{Z_{(R)} Z_{(T)}}{Z_{(R)} + Z_{(T)}}$$

$Z_{(L)}$ is the load impedance and $Z_{(R)}$ is the line receiver impedance in parallel with the terminating impedance $Z_{(T)}$ from Figure 8.6.

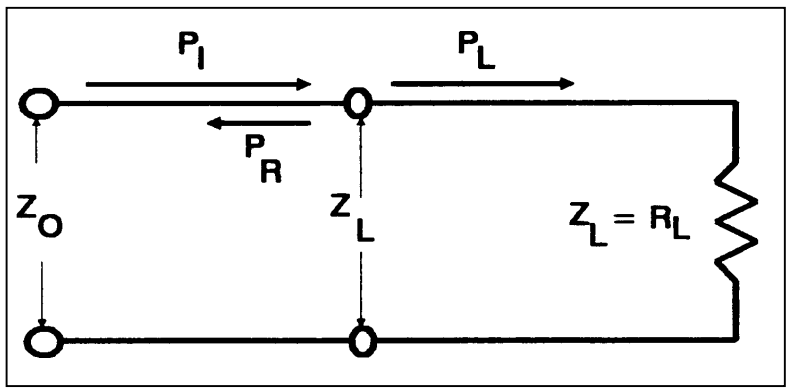

Figure 8. 6 – Transmission Line Model

Therefore, to design or upgrade a line receiver so that it has no reflected power, a terminating impedance is required which satisfies the equation $Z_{(L)} = z_{(0)}$, or:

$$Z_{(T)} = \frac{z_{(0)} Z_{(R)}}{Z_{(R)} - z_{(0)}}$$

A line receiver's sensitivity and hysteresis can be found in the manufacturer's published data. Hysteresis generally provides noise immunity of several tenths of a volt for single ended systems. It can also be the source of ringing on the transmission line. Some line receivers have an externally controllable voltage input switching threshold. The Texas Instrument SN75140 dual line receiver has a reference voltage pin for each receiver which allows the designer to specify the input switching threshold, as shown in the function table of Table 8.1. The reference voltage can be varied between 1.5 volts and 3.5 volts.

Table 8.1

Line Input	Strobe	Output
-100 mV	L	H

V reference		
+100 mV	X	L
X	H	L

SN75140 LINE RECEIVER

Transmission Line Examples

The schematic of a typical line driver (SN75188) was shown in Figure 8.7. The line driver's curve of output current versus voltage in shown in Figure 8.8. To simulate a typical TEMPEST system application, a short interface cable was attached between the driver and its intended receiver interface circuit. When radiated emission measurements were made, significant signal related emissions were detected radiating directly from the interface cable.

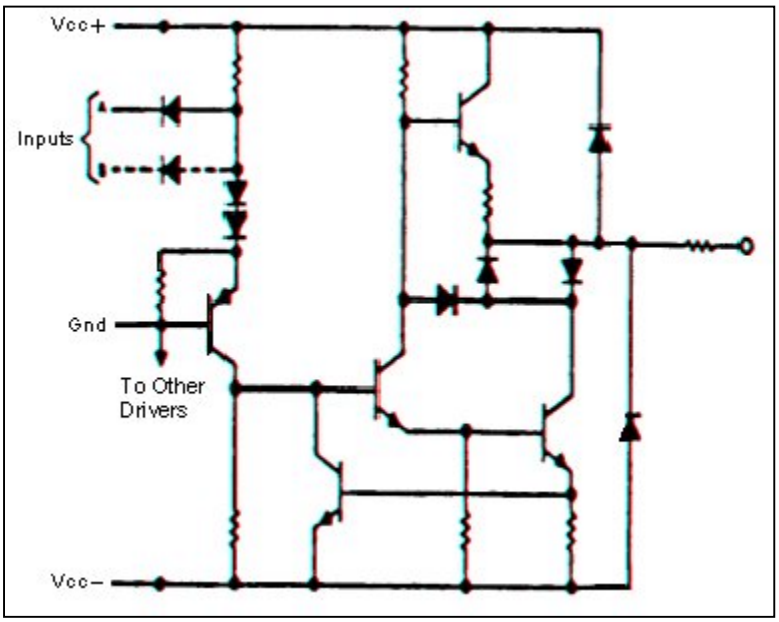

Figure 8. 7 - Schematic of a Typical Line Driver (SN75188)

Upon closer examination of the line driver's hysteresis curve, a small three volt change can be noted during the time when current reverses direction. The effect of this voltage change in a TEMPEST controlled system environment was to cause ringing along the transmission line resulting in radiated emissions.

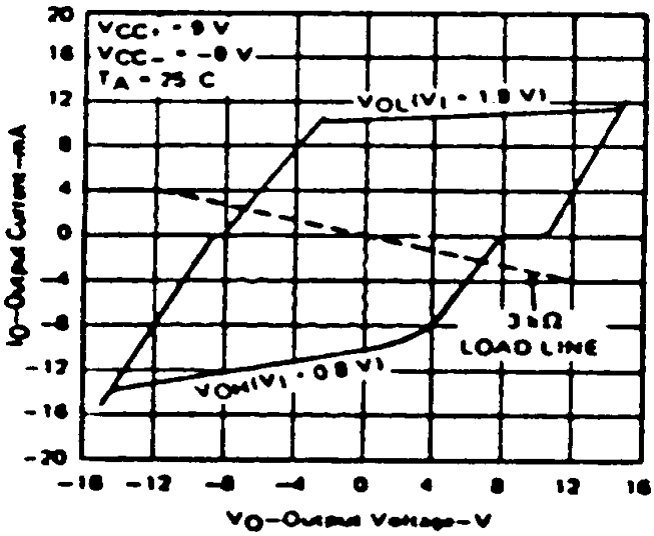

Figure 8. 8 – Hysteresis Curve

Two "fixes" are possible to correct the short cable radiation problem while still maintaining the output waveform within a typical secure system's specified performance requirements. Basically, the intent is to maintain a smooth voltage transition during the time when current changes direction.

Figure 8.9 shows the desired fixes to reduce the TEMPEST emission problem. First, a capacitor can be added between the driver output and the -Vcc pin to reduce the effect of the

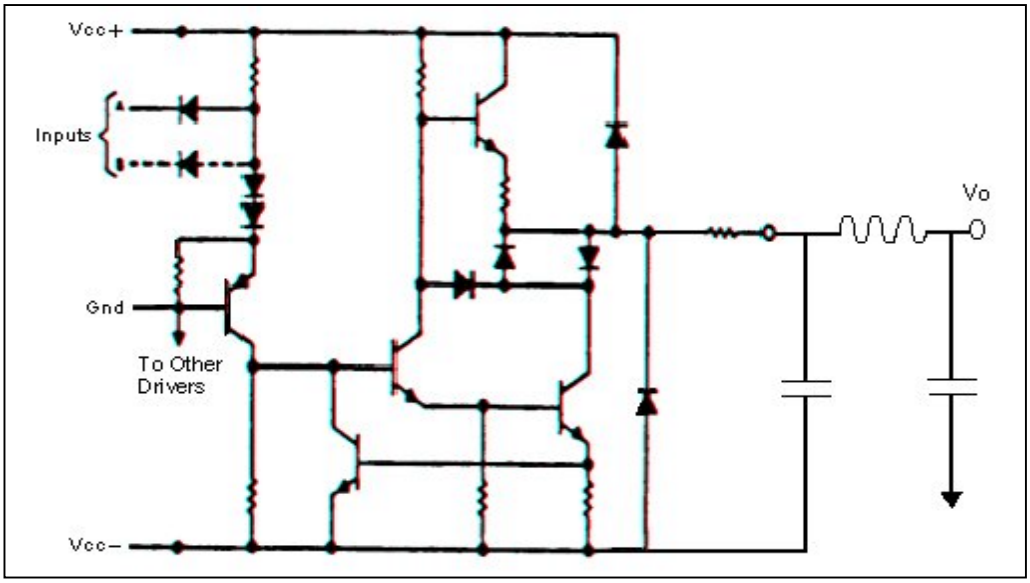

Figure 8. 9 – Modified Line Driver Fixes

hysteresis notch. Since this change also changes the output waveform, an inductor is placed in series on the transmission line to restore the signal waveform's shape. The capacitor thus became the energy source for the output signal during the transition period.

The second capacitor can be added to load the interface cable, reduce the effects of inductive reactance from the inductor, and better match output impedance to the short cable. Notice in the figure that this capacitor is returned to the signal reference ground of the driver. The combination of the two fixes will effectively eliminate the previous emission problem.

For simple zero to plus level outputs, if the output data rate is low enough, and if a more significant board level fix can be justified, the same wave shaping effect can be achieved by removing the entire line driver and using a three terminal voltage regulator as the driver circuit.

In another example, the unfiltered output of a Motorola 1488 line driver, used for RS-232 applications, produces a noisy square wave output. Often, the high frequency components of this square wave output are mismatched to the transmission line impedance, resulting in significant radiated noise above the specified emission limits.

As a solution to this problem (Figure 8.10), the output signal can be wave shaped to reduce the radiated noise by placing a circuit card type filter between the line driver and the short

shielded output wire inside the box containing the driver. Since off the shelf filters normally are grounded to case, and since there is normally significant inductance in a typical unit's ground system between the chassis and the driver return, the card type filter should be mounted

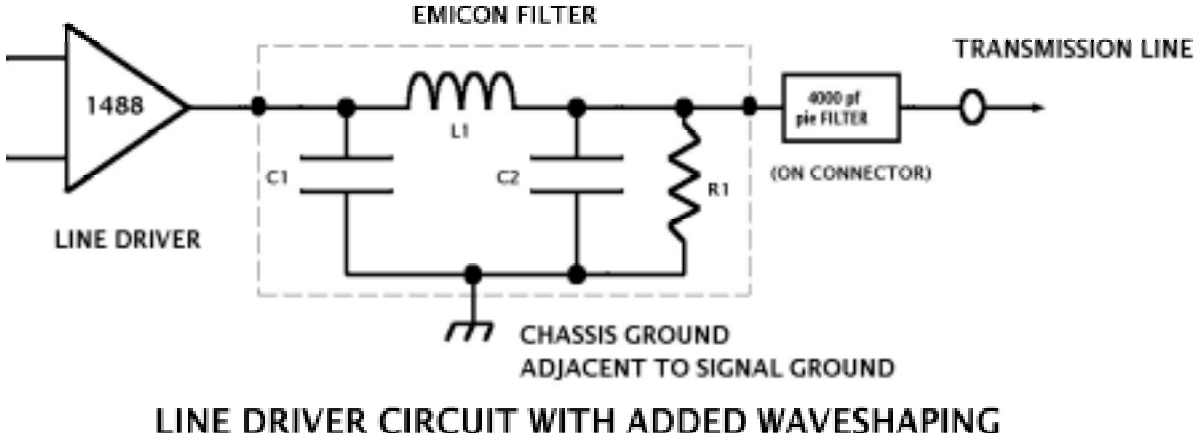

Figure 8. 10 – 1488 Line Driver Modification

immediately adjacent to the circuit card containing the driver in order to prevent a chassis ground loop. On the box wall itself, a pin filtered ferrite type connector can then be used to reduce any high frequency signals which might have inadvertently coupled through the shield to the internal signal line wire inside the box. Again, it is most important to stress that component type filter circuits must be carefully evaluated concerning where they shunt noise current.

In difficult to control cases, the output of the driver in Figure 8.10 could look like Figure 8.11A. Notice in this case that small voltage spikes might still be present on the waveform. To correct this problem, remove C1 from the commercial filter. This modification has the effect of increasing the impedance at high frequency to the line driver, and results in the waveform shown in Figure 8.11B.

The third example, Figure 8.12, shows bandwidth limiting used with an Op-amp driver circuit. In this case, the driver is used on a Black digital output line. Op-amp powerline rejection is not a problem for the example with the use of controlled power, such as RC, LC, or ferrite decoupling to the Op-amp power inputs. However, since there is a potential for high frequency signals to be coupled to the Op-amp's signal input leads, also reducing the operational bandwidth of the device effectively eliminates the majority of signal input coupling problems.

Figure 8.13 is a practical fix for the Motorola MC 1489P line receiver. In this example, a peripheral device receives Red data from a line driver located inside an existing TEMPEST pc. Since users must access the peripheral through the already secure pc, emission security of the network is localized only to the pc/peripheral device interface.

A security problem could result in this case only if internally coupled signals escape from within the peripheral device through radiation or ground loop conduction. For the condition where an existing line receiver is already designed and located inside the peripheral device, the thrust of a control effort could be to locate the peripheral in a less sensitive (more emission secure) area, or to add on board fixes at the line receiver device. In the case of the MC 1489 P, one set of fixes that effectively suppress internal generated signals are to provide additional decoupling through the inductor/capacitor circuits shown, increase the resistance and capacitive values near the RS-232 connector, and add ferrites to reduce high frequency harmonics on the signal lines.

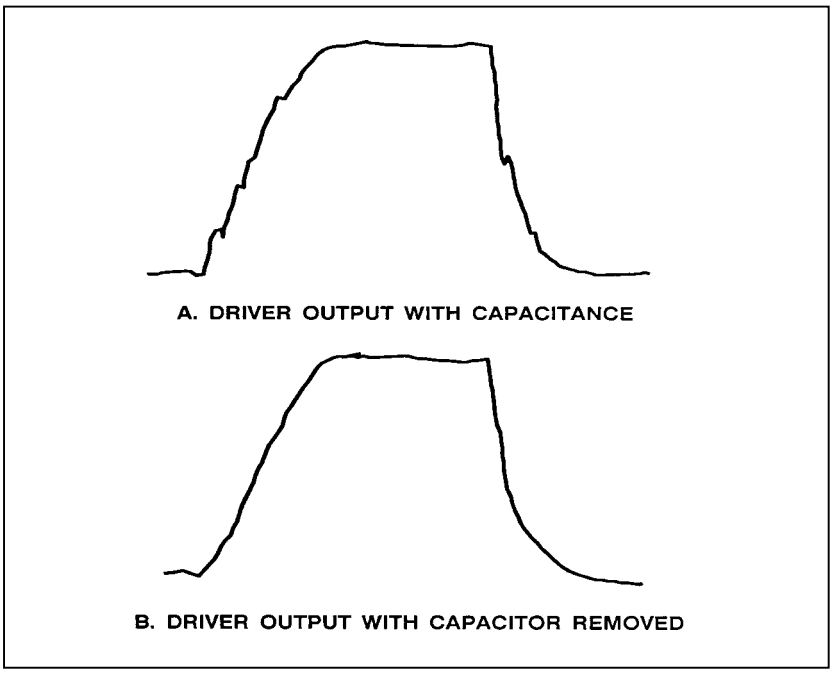

Figure 8. 11 – Wave Shape With Design Modification

The standard MIL-STD 188C wave shaper/driver circuit has a problem in that when inductively loaded by a transmission line, the combined effects of the inductance and the internal coupling capacitance of the 2N2222A transistor effectively turn the driver into a Colpitts oscillator. As shown in Figure 8-13, by adding a 50 ohm resistor in series with the output, the increased damping eliminates the oscillator effect.

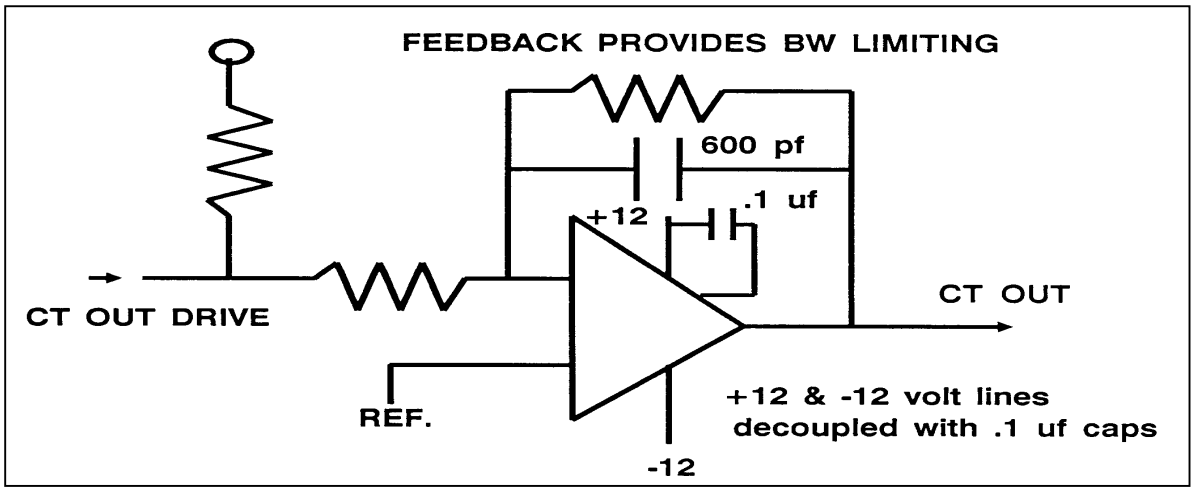

Figure 8. 12 – Bandwidth Limiting an OpAmp

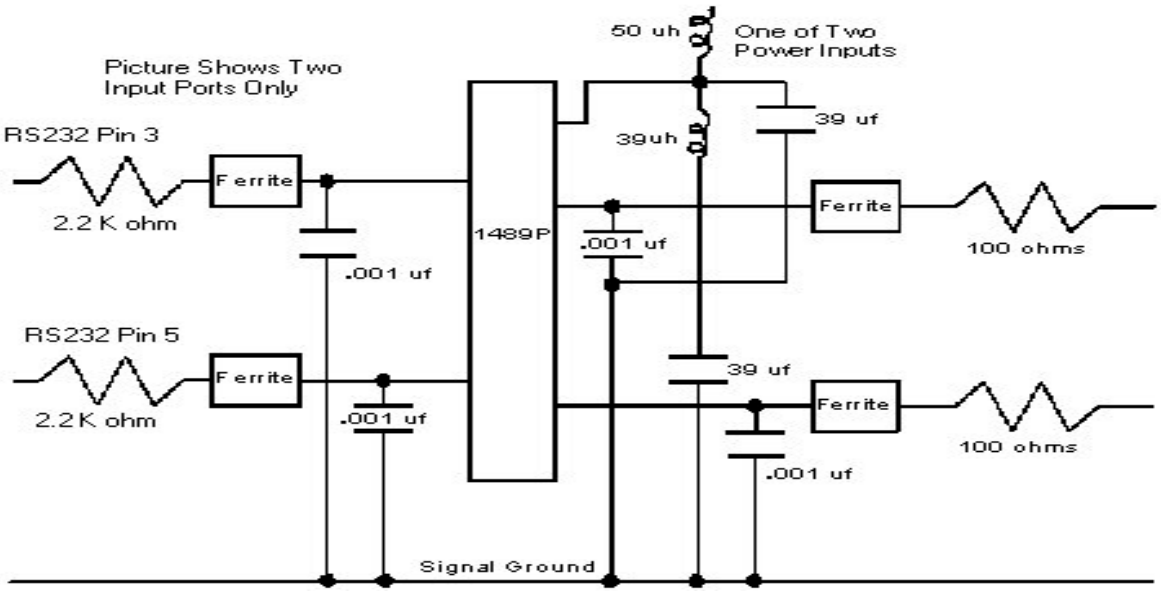

Figure 8.13 Modified MC1489P Line Driver

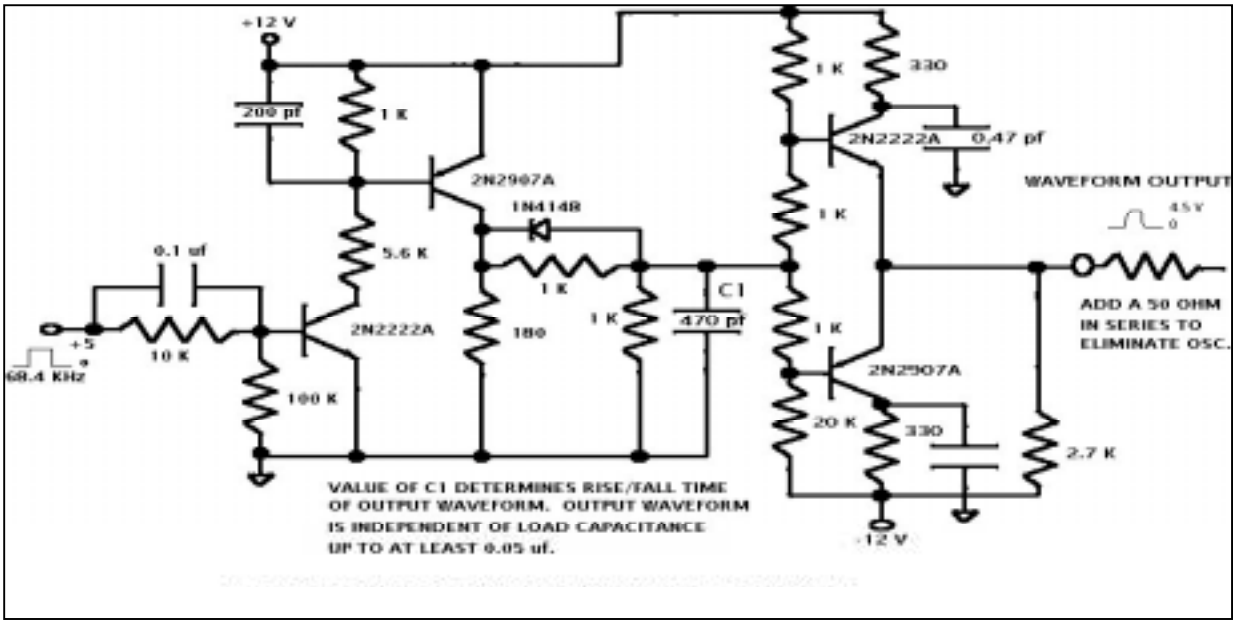

Figure 8.14 – MIL-STD 188C Wave Shaper/Driver

IC DIP Type Filters

A number of organizations supply DIP type IC filters, such as the configuration shown in Figure 8.15[1], to help control buss and multi-wire interface signal emanations. The filters act to:

1. Reduce the emission of intelligence bearing noise by filtering out the high-frequency content of digital signals at the board level.

2. Replace the expensive and bulky inductive devices typically used to suppress conducted emanations.

3. Minimize space and routing problems, and reduce manufacturing cost per installed resistive and capacitive function.

4. Increase board yields and reliability by reducing component count.

While several approaches are available at the board level to control emissions, including grounded metal enclosures, shielded cables, judicious component placement and interconnect designs, and power-supply decoupling, low-pass filtering is particularly effective when the noise components to be rejected occur at frequencies higher than the signal frequency (to be passed). For these situations, low-pass resistor-capacitor filter networks are ideal.

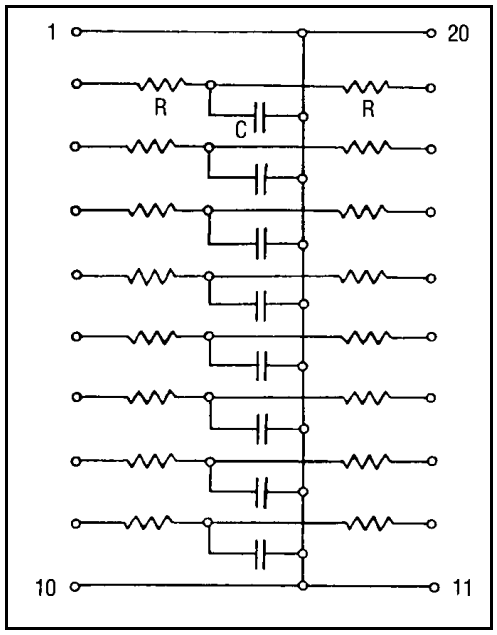

Figure 8.15 – Typical DIP Type RC Filter Package

A typical application would be to filter signal lines between RS-232 drivers and their corresponding connectors. In such low to medium frequency applications, these networks represent a more useful (and economical) solution than inductive type filters such as ferrite beads. In fact, ferrite beads become mostly ineffective below 10MHz. Notice the typical response curves for RC type filters shown in Figure 8.16.

The basic "T" configuration (Figure 8.15) is a standard R-C network normally available in versions for 7 or 8 input signal lines. Under steady state conditions, the capacitor C offers an infinite impedance to the DC component of the input waveform. Thus, the DC component of the signal voltage is passed to the load, but reduced in value by the voltage drop across the two resistors.

---

[1]*Guide to Network Applications: EMI/RFI Filtering, Bourns Networks, Inc., Riverside, CA, 1990.*

The impedance of C becomes lower at higher (noise) frequencies. Therefore, the noise component of the signal faces a voltage divider consisting of the first resistor (R) and C. At the high frequencies of the noise component, R will be much greater than the impedance of C. Most of the noise voltage will be dropped across the resistor. Almost no noise current flows through the load, and, therefore, will hardly affect the DC voltages (i.e., the signal) across the load.

Since the filter is symmetric, its principle of operation is the same for waveforms traveling in the opposite direction, in which case the voltage divider is formed by the second resistor and the capacitor. Such a symmetrical design is useful for filtering signals on a bidirectional bus.

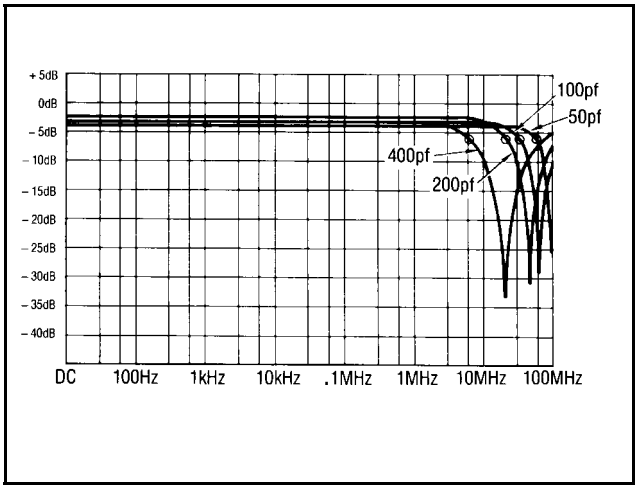

Figure 8.16 – Typical Response Curves

Since the filter is symmetric, its principle of operation is the same for waveforms traveling in the opposite direction, in which case the voltage divider is formed by the second resistor and the capacitor. Such a symmetrical design is useful for filtering signals on a bidirectional bus.

$$\frac{V_{out}}{V_{in}} = \frac{R_L}{j\omega C(R + R_S)(R + R_L) + (R_S + R_L + 2R)}$$

Assuming purely resistive source and load impedances, the transfer function is given by: R_L is the load resistance and R_S is the source resistance of the filter.

RC Filter Component Selection

The "roll-off" frequency f_c, defined as the frequency at which the filter passes one-half the power it receives at its input terminal, is normally specified from the low megahertz range up to about 100MHz. This frequency, also known as the "-3 dB" frequency, is determined by the R and C values chosen, and should be selected to attenuate at frequencies no lower then harmonics above the third harmonic of the intended signal to be transmitted.

The specification of these values will depend on constraints relating to problem frequencies being conducted, system performance, driver loading, and available products or components. The following procedure is suggested to choose appropriate values of R and C.

The first step is to determine the desired roll-off frequency of the filter, which will lie between the signal frequency and the dominant frequencies of the problem noise. By determining the pole of the filter (setting the denominator of the transfer function equal to zero), the roll-off frequency can be expressed in terms of R and C:

$$f_c = \frac{R_S + R_L + 2R}{2\pi C\,(R + R_S)(R + R_L)}$$

R_L is again the load resistance, and R_S is the source resistance of the T-filter.

Remember, the RC combination must be chosen so that the additional RC time delay will not result in exceeding the sampling window of the receiving IC, due to excessive lengthening of signal rise and fall times. Rise time from 10% to 90% of the waveform amplitude can be calculated in terms of the circuit's RC time constant using the 1 - exp (-t/RC) relationship for a charging capacitor. At 10%, $t_L = 0.1$ time constants, and at 90%, $t_H = 2.3$ time constants. "Time constant" equals $R_{th}C$, where R_{th} is the Thevenin-equivalent resistance as seen by the capacitor.

Equating the difference in the two time constants to the maximum tolerable rise (or fall) time:

$$t_{\max} = t_H - t_L = 2.2\,R_{th}C$$

$$t_{\max} = 2.2\,\frac{(R + R_S)(R + R_L)}{R_S + R_L + 2R}C$$

A final consideration is the insertion loss. As mentioned previously, the voltage drop across the two resistors will attenuate the voltage reaching the load. Normally, logic high and low levels should still be within valid limits of gate operation. Although signal attenuation can be minimized by choosing small R values relative to the load impedance, for enhanced security, signal attenuation must sometimes be maximized to the extent tolerable. Typical values for R range from 10 to 50 ohms.

In The Final Analysis

The equipment interface circuit consists of a line driver and its external circuitry, the transmission line, and the line receiver and its external circuitry. The choice of each component is dependent upon the required interface standard and the noise environment the circuit is exposed to. The choice of each component is also dependent on the data rate to be transmitted,

the length of the transmission line, and on the sensitivity of the receiving circuitry. In all cases, it is best to judiciously design the entire interface specifically for its intended application.

Bibliography

1. B.C. Gabrielson, The Aerospace Engineers Handbook of Lightning Protection, ICT Publishing, Gainesville, VA, 1988.

2. D.K. Cheng, Field and Wave Electromagnetics, Addison-Wesley, Reading, MA, 1983.
3. EIA Standard RS-423-A, Electrical Characteristics of Unbalanced Volt age Digital Interface Circuits, December 1981.

4. B.C. Gabrielson, TEMPEST, A Description and Application, ITEM Magazine, R & B Enterprises, 1984.

5. B.C. Gabrielson, Interfacing For Quieter Transmission Lines, AFCEA, 1989.

6. R.L. Walter IV, Specifying and Designing Equipment Interface Circuitry Which Meets EMC/EMI Requirements, EMC EXPO 88, Washington D.C.

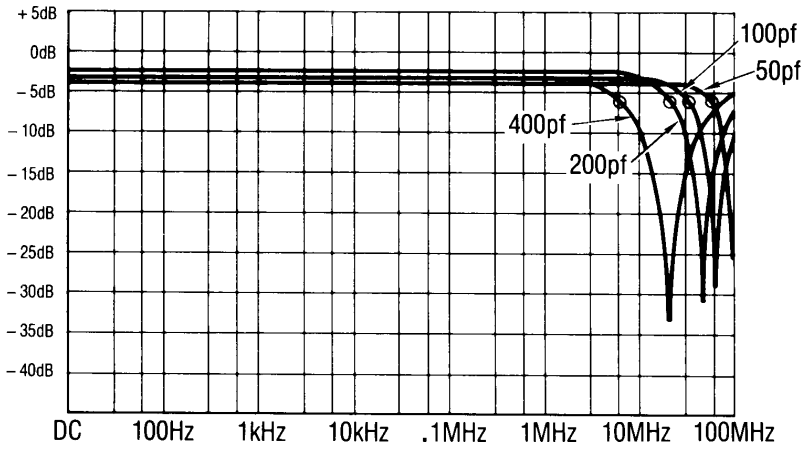
+ 5dB
0dB
– 5dB
– 10dB
– 15dB
– 20dB
– 25dB
– 30dB
– 35dB
– 40dB
DC
100Hz
1kHz
10kHz
.1MHz
1MHz
10MHz
100MHz
100pf
50pf
400pf
200pf

Chapter 9

Interactive Problem on Airborne Platforms

Various Electromagnetic Threats

As has been stated in previous chapters, the containment of primary sources of TEMPEST signals are not the only concern relative to wire and cable design. Designers must also be concerned with energy coupling through paths created to protect against other susceptibility or hardening concerns. In this regard, both commercial and military systems require EMI and ESD protection, while military systems often also incorporate EMP and lightning hardening measures. Often in aircraft applications, only one end of a shield is grounded at the end closest to the central ground point of the power system. Steady state EMI considerations and concern foreground loops' are the engineer's primary design drivers here since grounding at both ends permits the stray ac fields prevalent in aircraft to induce circulation currents into the shield, and this current can interfere with the operation of aircraft control electronics.

Lightning and EMP protection are two other aircraft design drivers. in the case of lightning currents, grounding shields at both ends is essential to reduce the potential for arcing and thermal damage. EMP protection requires that cables not only be grounded at both ends, but that the shields be circumferrentially grounded. In addition, circuit level lightning (and EMP) protection requires the placement of terminal protection devices such as transorbs on the interface input lines. Simply stated, if a shield is left ungrounded at one end, EMP and Lightning threats will be maximized.

ESD can potentially occur whenever a high inductance bond connects two low impedance structures, or where independent conductors capacitively coupled exist. TEMPEST problems result from signals getting out of a system rather then into a system. Therefore, the primary means of controlling TEMPEST protected signals are shielding and controlling ground paths so that the signal noise is uncontaminated and returned directly to its source by the most direct means. The two primary interface driver/receiver ports used for TEMPEST signals are represented in Figure 9.1. In the majority of cases, a differential type signal is used with interconnect wiring twisted and shielded.

TEMPEST signal line protection devices, such as in the case of the differential line receiver shown in Figure 9.2 (and discussed in Chapter 8), are often defeated by lightning or EMP current protection devices which create ground paths outside the control of the TEMPEST protective devices. What all this means is, that in any one cable bundle, there may be a direct conflict between grounding practices that are best for one threat and not the best for others.

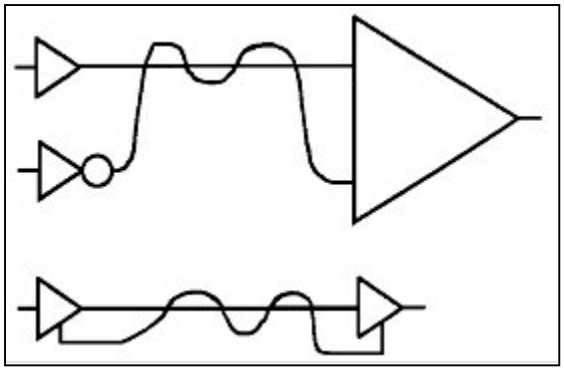

Figure 9. 1 – Typical Tempest I/O Connections

Electrostatic Discharge (ESD) is a fundamental problem when motors or ordnance are present. In

aircraft, cyclic low level engine generated ESD in the structural ground plane can have the same effect on sensitive electronics as would the presence of an oscillatory signal driven through the ground system.

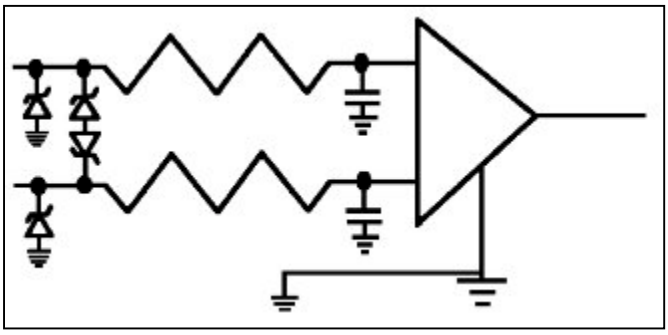

Figure 9. 2 – Protected Differential Line Receiver

While ESD and Electromagnetic Pulse (EMP) may not be typical considerations for TEMPEST designers, quite often a major TEMPEST problem can be created when extra grounds to accommodate these concerns are added to a system. These grounds can carry sensitive Red data signal returns which reduce the isolation otherwise provided by controlled TEMPEST grounds. In the first place, ESD is a major source of malfunction in machines which must be controlled[1]. In the second place, ESD generated within a machine will result in a radiating field[2], which if cyclic, can cause TEMPEST problems to appear.

Although ESD can occur from two primary charge holding sources, human beings and materials, the resultant waveforms are significantly different. Conductors can charge to various potentials when exposed to varying electromagnetic fields, such as aircraft on a hanger deck, or can continuously charge and discharge through friction in an engine. in addition, an electrostatic discharge may be coupled directly (conducted) or indirectly (radiated) to virtually anywhere inside the equipment. In either case, the precautions to prevent malfunction will directly affect both the TEMPEST controls within the equipment, and the interface wiring connected to the equipment.

EMP is primarily a one-time nuclear event condition, with circuits generally hardened to survive the event in an operational state. When an EMP event occurs, a large electromagnetic pulse induces a severe current pulse into cable shields and hence to inner wiring in the cable harness. Hardening the interface involves back to back zener diodes, or employing a terminal protection device (TPD) at the interface circuit. Using multiple shields (nested shields) greatly reduces the current coupled to the inner wires of the cable harness. The primary problem with adding protection devices is the creation of additional ground paths for Red signal returns.
One method of dealing with the ESD problem is to control the environment creating the problem. Since this paper deals with wire and cable design, the attached Appendix lists several papers related to environmental controls for those interested in more information. In regard to cables, the intent in protecting from ESD or EMP is to provide a path that will prevent the spurious energy from getting to the signal interface or reference of the switching circuitry while not creating additional ground loops for Red signals. In addition, in aircraft especially, the ground currents must not become common mode noise sources.

---

1 *'Curren, J., and O'Donnell, J., Electrostatic Discharge (ESD) Sensitivity Versus Product Cost/Performance Benefits, IBM Technical Report, TR-01.1497, July 1971.*

2 *Kolzowski, A, cf. al, Electrostatic Discharge Research at the university of Ottowa, IEEE 1989 Symposium on Electromagnetic Compatibility, IEEE, Denver, May 1989.*

Fortunately, the general procedures to achieve EMP and ESD objectives similar to those for standard TEMPEST controls, shielded cables and the isolation of shields from signal references. Procedures for ESD are illustrated in Figure 9.3.

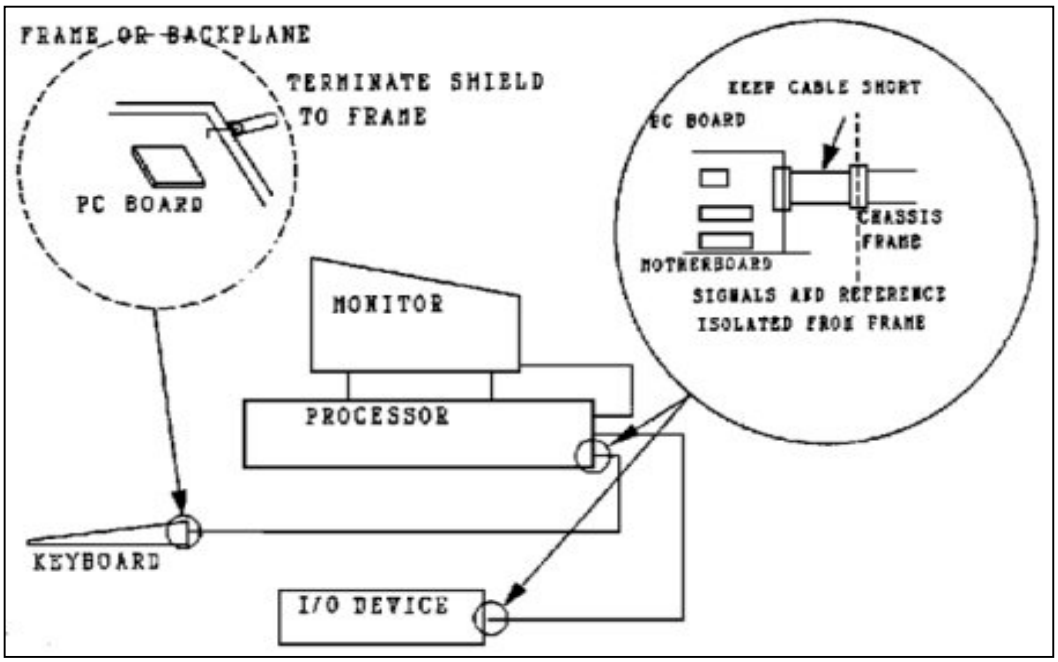

Figure 9. 3 – Examples of Good Reduced ESD Design

In this case, the signal lines have adjacent references that are isolated from the external cable shield. The shield is tied to the frame of the central piece of equipment. When peripheral equipment is attached to the central unit, controls must be employed when grounding the frame and shield so as to avoid ground loops[3]. This technique allows charge transmitted directly or indirectly to a cable to follow the path of the main power ground and not appear on or affect signal or reference lines. If the ESD is generated from the system itself, as often occurs in printers, the cable shield may also protect against modulation of the ESD field by a signal-generated field.

In evaluating interface wiring with EMP TPD's attached, the concern is that the device capacitance required to shunt large currents into the structure ground not create a path for TEMPEST problem currents at much lower levels. Since signal returns are also normally isolated and carried as close to the Red source as possible, the key is to locate the TPD's physically close to the location of the central Red ground without necessarily being located on a circuit card. EMP TPD's usually appear on an interface device just inside the hardened box. Therefore, for critical TEMPEST signal lines, two such devices, one primarily for TEMPEST signal lines, each located at different locations might be a functional solution to the problem.

It is also very important to emphasize the part of connectors in maintaining the shield structure. The outer shield of a cable cannot be terminated to a connector pin if ESD control is necessary, but must be bonded to the backshell of the connector a full 360 degrees similar to

---

[3] *Bogar, J., Grounding for Electromagnetic Compatibility, Design News, Vol. 43, No. 4, Boston, February23, 1987, p. 101-106.*

EMP protected wiring. Remember, since TEMPEST protection of COMSEC equipment often requires that the signal return wire be floated and carried through the system except at specified locations, a design conflict is possible. In this case, Triaxial cables are an important alternative solution, with inner and outer braids treated separately.

A second approach to protecting against EMP threats while not disturbing internal circuitry would be to protect the interface directly with the use of a varistor at the connector interface. Connector pin varistors have electrical characteristics that are similar to back-to-back zener diodes (such as were shown in Figure 9-2). The varistor impedance changes from a high to low value as the transient voltage increases. The pulse destructive energy is absorbed and converted to heat by the varistor.

Finally, the routing of cables makes an important difference in the problems associated with indirect ESD and EMP. For ESD, cables should be routed away from areas that can generate regular ESD, and as with EMP protection, should be kept as short as possible.

Signal References

With the advances in integrated circuit technology, both in package density and switching speed, considerations must now be given to cable and wiring designs that may previously have been insignificant to TEMPEST engineers. Considering cables and wiring as transmission lines, coupling between the switching signal and its reference is critical in terms of both system performance and information emission.

The "ideal" connection between a signal line driver and the receiver at the other end is shown in Figure 9.4. The signal line goes directly from driver to receiver via a constant impedance path with no discontinuities or changes in the signal reference. This ideal case is seldom implemented in a practical sense. The more typical case is illustrated in Figure 9.5. Here it can be noted that there are stubs on the 'main" transmission line, the line itself has different impedances and even different references. Of course, some signal lines are not coupled to any nearby reference.

Changing impedance and changing the reference voltage on a transmission line can allow spurious signal coupling into the system. Consider the case of very large scale integrated circuits (VLSI). These circuits often have high speed line drivers that can drive the signal off the chip and circuit card.

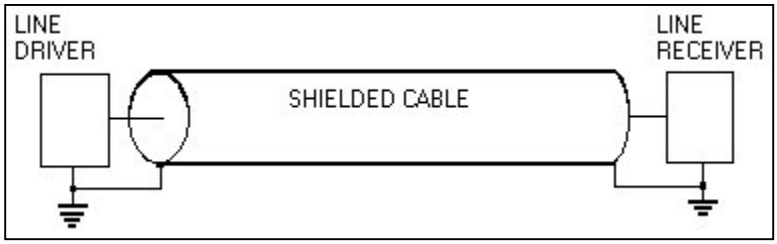

Figure 9. 4 – The Ideal Interface

It is possible to have the situation, especially when dealing with a composite aircraft with a single point grounded power system, where the distance from the line driver to the printed circuit line has no adjacent reference. As current moves down the signal line, opposite current is induced in the reference line. Since there is no direct physically close path back to the signal source (the line driver), the reference current is forced to find a path through the appropriate

module pin and reference structure. Since this structure may be shared by many other references, TEMPEST level spurious coupling results.

The solution to the problem is to provide differential and common mode decoupling for the critical interface lines as near to the device as possible. Differential decoupling should be accomplished using capacitors of very low inductance with loading appropriate for the switching frequencies required.

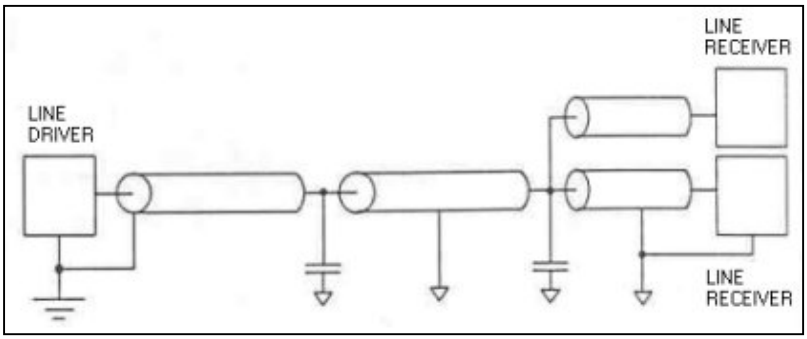

Figure 9. 5 – The "Typical" Interface

Discrete configured common mode inductors located on the printed circuit board (sometimes a ferrite bead) are generally used for this application. New miniature packages are available that contain inductors or ferrite beads, intended for both common mode and differential mode applications. if the package is intended for common mode applications, it usually consists of many leads wound on a small common core. Since the parts are PC mountable, they can be placed near the 1/0 drivers to reduce common mode coupling before reaching the connector and cable assembly.

Separation of Line Driver and Receiver Boards

By placing the VO circuitry on a separate board from the rest of the circuitry, common mode and differential mode coupling problems can be effectively eliminated. Since less circuitry exists on the board, a solid ground plane can be employed, grounds to the chassis can be controlled, filtering can be applied directly between signal line and signal ground, and bypass capacitors win shunt return currents directly to their source. In addition, the physical separation of the 1/0 circuitry and other logic circuitry will significantly reduce the possibility for cross talk coupling.

Interactive Grounds

Sometimes for increased TEMPEST protection, cable shields are not connected at all to the panel on which the connector is mounted, but instead are carried on a pin and connected to some remote "system ground" point. To a lightning protection or EMP engineer, such a practice should always be avoided because it introduces enough impedance to completely destroy the effectiveness of the shield from these threats. In addition, such a practice reflects a misunderstanding of the role of "ground" connections as they relate to the host of EM environments.

Consider, for example, the case of an aircraft with a considerable amount of composite material, such as both wings and several skin panels, and a heavily shielded cable bundle for, among other requirements, a fly-by-wire system running the entire length of the aircraft including to hydraulics in both wings. Heavy shielding is necessary in this situation to control lightning currents. In addition, a maize of ribbon and small shielded cables are employed to connect the various electronic systems located close to the cockpit. The central power system for

the aircraft is located inside the structure behind the pilot. One of the systems inside the cockpit is a TEMPEST secure communication system with a black power input and also a communication interface connected to a COMSEC box. The COMSEC box is connected to a transceiver, as is an unsecured communications link, and the transceiver is connected to an antenna (Figure 9.6).

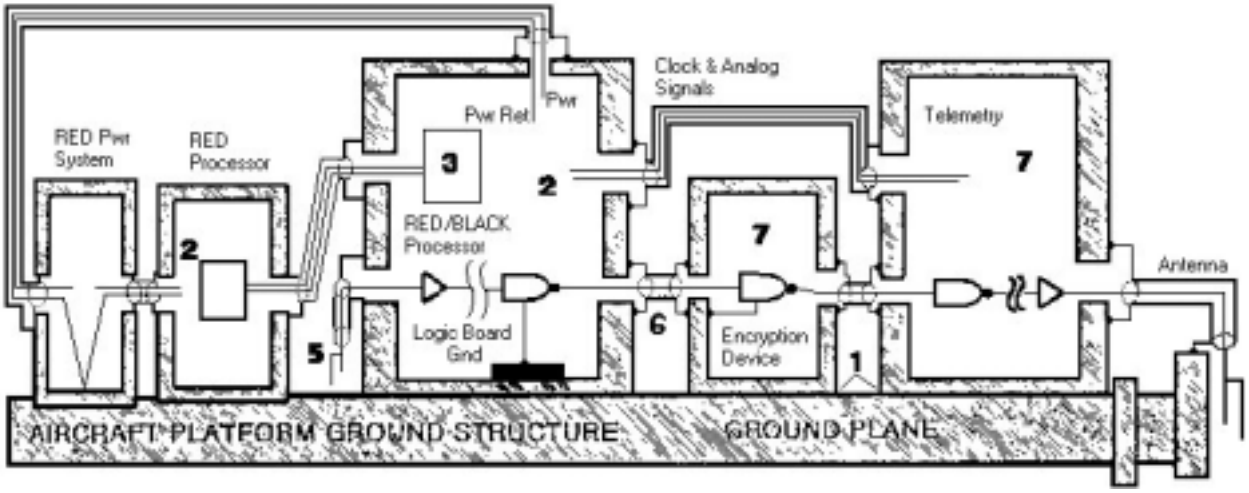

Figure 9. 6 – Typical Airborne RED/BLACK System

1. A heavy solid line indicates a bond on the metal to metal surface.
2. The power return is floating at both supplies.
3. The R/B processor and the RED processor interface circuits are optically isolated.
4. Transmit and receive antennas are isolated in this case.
5. One of the two lines carried are shown.
6. Only half the device is shown.

Figure 9.7 represents the aircraft power and grounding structure. In this case, the individual boxes are all powered from the central power system, with local internal power individually derived. Notice that some boxes, not associated with the communications equipment, have floated structures, only grounded through their shielded cable harness. The antenna cable shield is grounded at a number of locations to prevent lightning arcs, as well as providing isolation. Figure 9.8 shows the telemetry system for a typical airborne application. in this case, both the power reference system and some of the controlled RED signal interfaces are shown. Notice that a single point power reference system is used.

Figure 9.9 is the schematic of a SN5188 line driver circuit, typical of those used for driving digital signal lines. Notice that the output drive line is offset by .7 volts (one additional diode drop) from the center of the circuits plus and minus voltage sources. The system reference ground (the output used as the signal return) is not exactly referenced to the center of the power system either. What results is the equivalent biased driver shown in Figure 9.10 driving a low level signal source into the ground system. This signal appears as a low level common mode voltage on all other boxes referenced to the same ground platform.

When the digital signal line is connected to a line receiver circuit through a shielded interface cable, the condition shown in Figure 9.11 exists. In this'case, the return signal reference sees a

finite impedance between its board signal ground and the chassis ground connected to the shielded connector. The cable shield also sees a smaller (shown as a larger box) ground path through the structure of the platform. The path through the structural ground becomes the principal common mode return path for the offset current from the digital line driver. While some energy is returned in the cable shield, this path represents a simple current split between a higher impedance (the cable shield) and lower impedance (the structure).

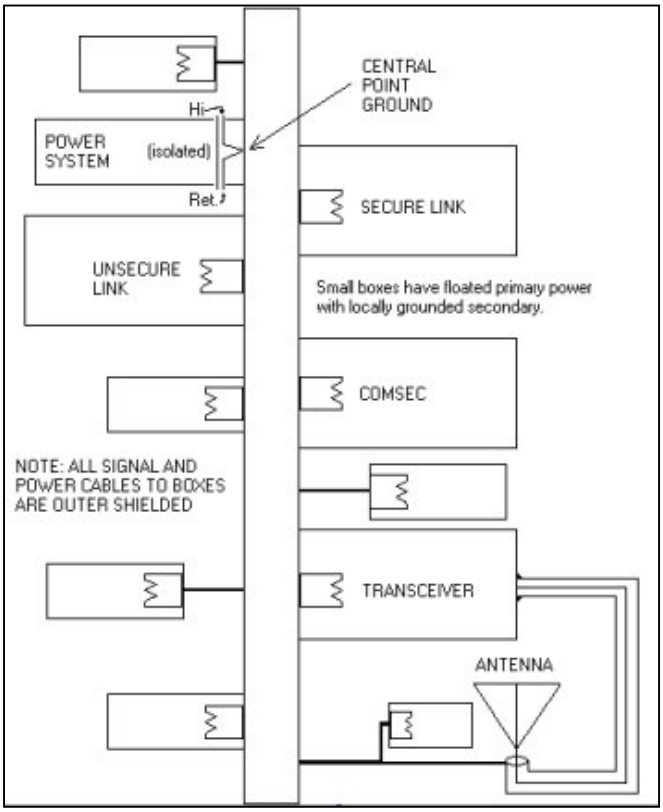

Figure 9. 7 – Aircraft Power and Structural Ground System

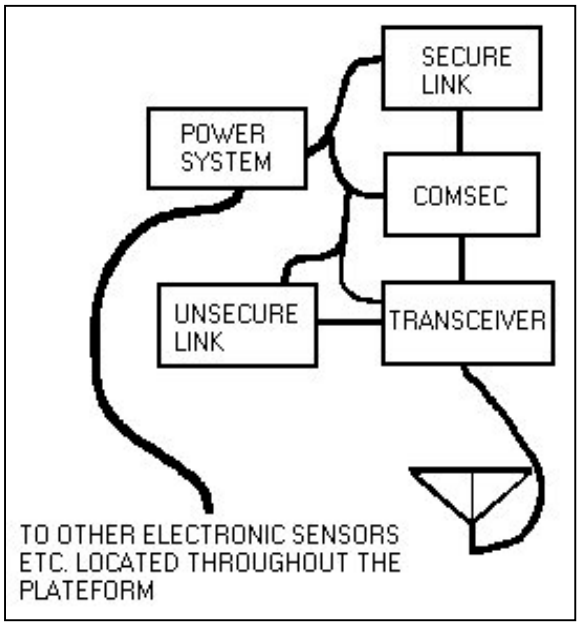

Figure 9.8 – Airborne Telemetry System

Figure 9.12 represents the best approach from a TEMPEST perspective to reduce internal emissions from reaching the outside world. In this case, radiated energy from the inner wiring is absorbed to some extent by the inner shield and returned to the signal's source. This reduces the energy that escapes to the outer cable shield, and hence to the outside world.

A conflict arises when the interior cable is ungrounded relating to lightning and EMP protection. Lightning currents are induced on an inner conductor as a result of current flow on the outer conductor. Arching can occur when the internal shield conductor is not attached to a grounded surface. Therefore, to avoid the potential for internal shield arching, the outer shield must represent a significantly reduced impedance path for the current to flow in. A low impedance bonded 360 degree termination should be sufficient to achieve this objective. In addition, it is advisable to also add discrete terminal protection devices (TPD's) as previously discussed on the signal interface lines directly.

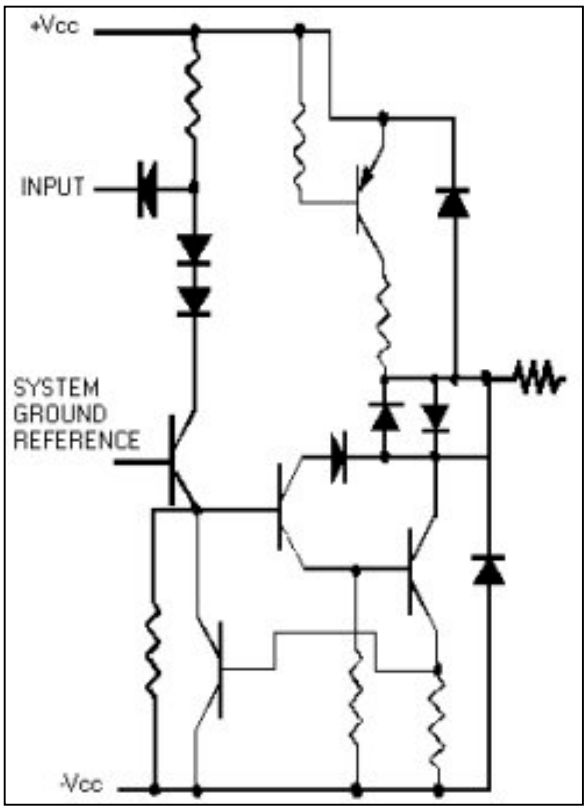

Figure 9. 9 – Schematic of SN5188 Line Driver

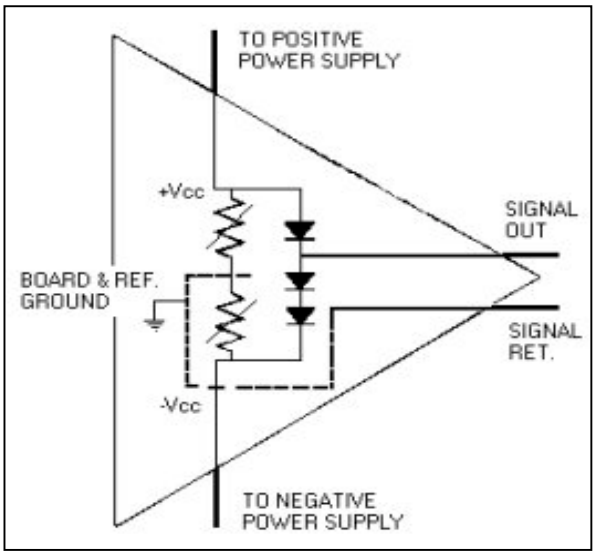

Figure 9. 10 – Line Driver Bias Equivalent

addition, isolation between signal output and power input. An isolation amplifier block diagram showing internal capacitive coupling is shown in Figure 9.13.

Isolation amplifiers are used to eliminate ground loops. An isolator with a "funny-floating" front end requires zero net bias current permitting two-wire connections to signal sources while eliminating problematical connections to source ground. The device has very good common mode rejection (CMR) performance allowing them to operate in noisy environments.

Key to Figure 9-12 numbers:

1. .7 Volts offset voltage
2. Impedance of one or both board / power systems in typical box.
3. Impedance of shielded cable.

Although not to be considered a cure-all, at lease one device is available that will eliminate the effects of most offset voltage problems. An isolation amplifier is a two port instrumentation amplifier with its signal input circuit isolated (at least at lower frequencies) form its signal output and power input. Three port isolators have, in

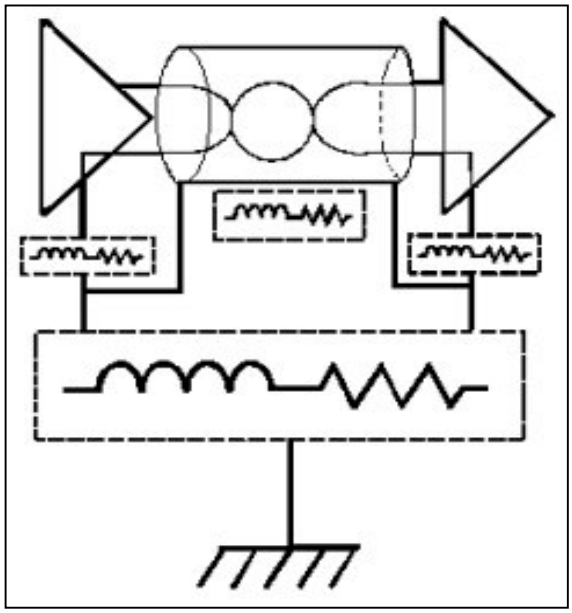

Figure 9. 11 – Interconnect Showing Impedances

4. Impedance of platform reference.

Summary of Interactive Grounds

This paper has attempted to indicate the concerns in cable and wiring design for TEMPEST applications. Two items bear specific mention:

1. It is always a good idea to consider the items mentioned in this paper as early in the design as possible. This consideration will nearly always save time and money.

2. Cabling and wiring is very much a platform related problem highly dependent on other parts of the system design. The technology selection, for example, has a major bearing on the cables and wires employed.

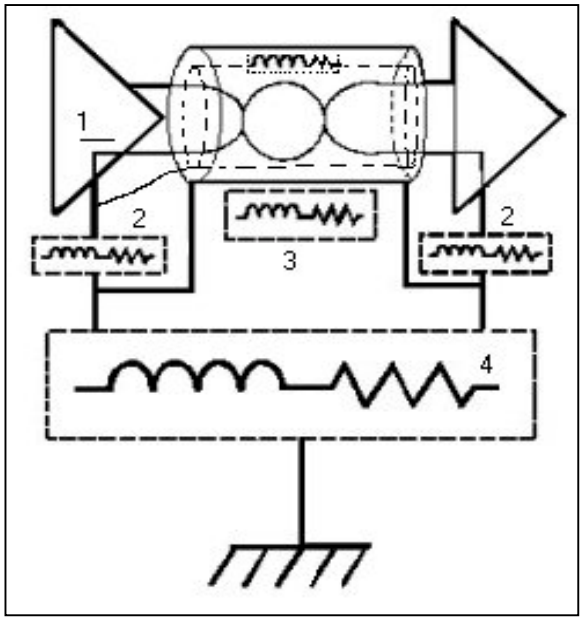

Figure 9. 12 – Combination of All Grounds

Chapter 10

Integrated Secure Cabling Protection in Facilities

Facility Introduction

> *TEMPEST IMPACT*
>
> *Although there has been a redirection in the impact of TEMPEST countermeasures and requirements, neither the requirements nor the demonstrated need have ever disappeared.*
>
> *There usually exists a requirement to provide some form of assessment concerning just how secure emissions from equipment operating in the controlled area really are.*

TEMPEST vulnerability assessments have not received the attention they deserve in recent years. Although there has been a redirection in the impact of TEMPEST countermeasures and requirements, neither the requirements nor the demonstrated need have ever disappeared. Even with secure processing equipment normally located inside a controlled area, there usually exists a requirement to provide some form of assessment concerning just how secure emissions from equipment operating in the controlled area really are. The question that should first be asked is "Do we really need to worry about protecting secure data processing equipment with some kind of expensive shielded room?" This question is asked time and time again, and the answer is nearly always determined by how much money is available, the level of classification assigned to the data being processed, and the threat presented by hostile intelligence agencies.

How to Assess Security Needs

Although the exercise is necessary, seldom is a good hard assessment of genuine shielding needs performed prior to determining that a shielded room, screen room, or conductive painted room will be assembled at a specific sensitive location. While various documents, such as MIL Handbook 232, NACSEM 5109, NACSEM 5111, and NACSEM 5203, and DIAM 50-3 provide guidance and verification criteria for various secure facilities applications, it still falls upon the engineer responsible to determine the unique techniques and application of principles to be employed at each individual location.

This paper provides a sequential method of determining both the vulnerability, and, if necessary, the grounding and shielding needs for protecting the various types and combinations of secure equipment assembled at any specific location within a secure (RED/BLACK) facility. In addition, it describes the test techniques used to verify the shielding effectiveness of rooms,

and the sequence of events that occur related to security during a typical building procurement process. The vulnerability assessed refers to the common TEMPEST radiated and conducted vulnerabilities associated with facilities that process classified information and doesn't address physical security.

Determining the Vulnerability

> ***Equipment TEMPEST Radiation Zone (ETRZ)***
>
> ***A zone established as a result of determined or known TEMPEST radiation characteristics.***
>
> ***Includes all space within which a successful hostile intercept is considered possible.***

The Equipment TEMPEST Radiation Zone (ETRZ) is a zone established as a result of determined or known TEMPEST equipment radiation characteristics. The control zone includes all space within which a successful hostile intercept of TEMPEST Compromising Emanations is considered possible. Notice that this zone refers to radiated characteristics, primarily the E field characteristics. TEMPEST signals can take the form of E field or H field radiated emissions, conducted emissions, or emissions from fortuitous paths. However, for even a medium size installation, identifiable conducted emissions from a specific signal source become very difficult to identify as the distance from the source increases. Therefore, for typical installations with a large controlled access area (exclusion area), the primary security concern is for radiated signals.

Fortuitous source emissions are an unusual combination of signals which can appear on any conductor, and which provide an unintended path for intelligible signals. Consider the control zone in Figure 10.1. These paths could be water pipes for cooling a mainframe computer;

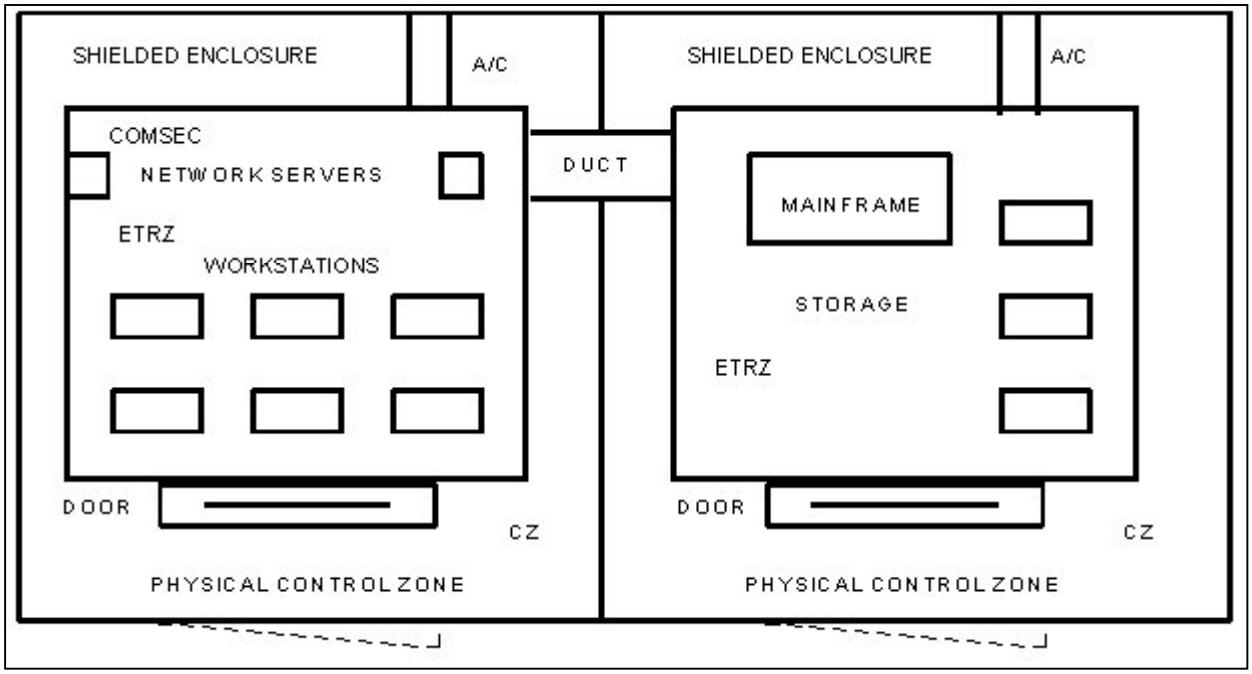

Figure 10. 1 - Super Computer Control Zone

building, fence or wall metal structural members; air conditioning ducts; cable shields for local area network equipment; overhead powerlines between buildings with different ground potentials; and telephone cables. In all cases, the objective is to prevent sensitive signals inside the control zone from appearing to a covert collector outside the zone.

> ***ANTENNA FARMS***
>
> ***Emissions can be radiated great distances from the powerline due to imbalanced internal loading.***
>
> ***Another emission problem often overlooked is the antenna farm effect due to interconnecting cables.***
>
> ***Unshielded wires carrying differential mode signals will radiate due to either an offset voltage on one wire, or due to common mode noise on both wires.***

Sometimes the physical path signals take to reach outside the control zone are extremely difficult to identify. One unusual antenna path often overlooked is the power feeder system for the facility. This condition was discussed in Chapter 3. Not only are conducted emissions a problem on power lines, but the entire building power structure can represent an extended wire transmission system, with compromising signals actually being re-radiated based on the antenna characteristics of the powerline wiring system of the building. These antennas are very much longer than those on circuit boards or wiring harnesses. The RF conducted emissions on the power line can get back to the power primary feeder line through the utility pole transformer.

A number six wire has an inductance of 0.301μH per foot. A twenty foot ground wire has an inductive reactance of 37.8 ohms at 1000 KHz. At higher frequencies the reactance is proportionally higher. Therefore, the ground side of the power leads will be at RF potential above ground for any power line conducted RF emissions. These emissions will couple through the utility pole transformer to the primary feeder. The coupling will be inductive at low frequencies and capacitive at high frequencies. The latter is due to the capacitance between the windings. Thus there is an entire "antenna farm" of radiators for the conducted emissions. The emissions can be radiated great distances from the powerline, and also can be conducted for a fairly long distance unless they are suppressed at the source.

Another emission problem often overlooked is the antenna farm effect due to interconnecting cables. In a system with well designed enclosures, a field induced problem can be created by the shielded or non-shielded cable between enclosures. Unshielded wires carrying differential mode signals will radiate due to either an offset voltage on one wire, or due to common mode noise on both wires. For a shielded cable carrying either common mode or differential mode signals, unwanted energy coupling will be the result of current flow on the cable shield itself.

The term common mode (or longitudinal mode) describes signals that are sent over one wire and return via a common ground. The voltages on the sending wire vary with respect to ground, and can be especially troublesome if the ground at each end of the cable has a different potential.

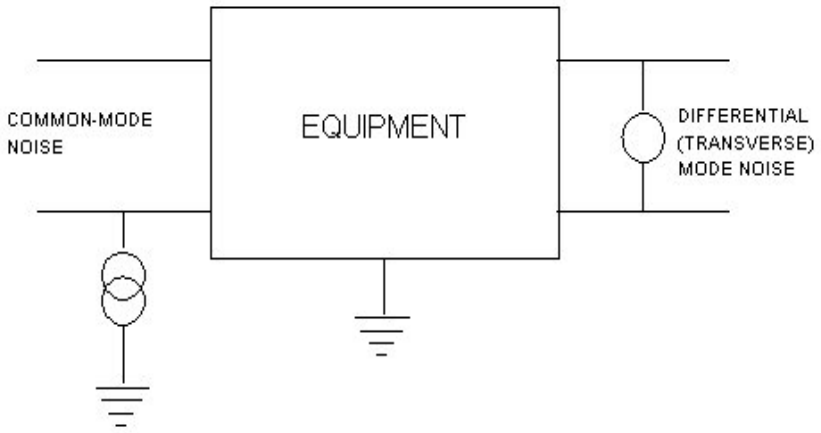

Figure 10. 2 – Common and Differential Mode Noise

The term differential mode (balanced or transverse mode) describes signals that are sent out over and return back over another wire. Neither wire is grounded, such as the case of the transformer coupled MIL-STD-1553 data buss. For differential mode transmissions, when the signal on one wire goes up by +V, the signal on the opposite wire goes down by -V with respect to ground.

Figure 10.2 describes common and differential mode voltage potentials.

AVERAGE POWER EFFECTS

It is very difficult to accurately predict the antenna effects of interconnect cabling.

If the building's average power consumption is 100 KVA or higher, regulations state that TEMPEST countermeasures are not a CONUS requirement.

<u>AVERAGE CONSUMED</u> power is not the same as rated power.

In general, it is very difficult to accurately predict the antenna effects of interconnect cabling. Where this becomes an issue is if the building's average power consumption is 100 KVA or higher. Current regulations state that TEMPEST countermeasures are not a CONUS (Continental US) concern for facilities with power consumption above this level, regardless of what a vulnerability assessment indicates. Determining the <u>AVERAGE</u> power consumed is not as simple as it seems, so the following information will address the vulnerability assessment problem as it really exists.

A TEMPEST site survey test would produce a more accurate evaluation of the potential problem. However, two criteria can be evaluated which will identify the potential for a TEMPEST problems existence. If interconnecting cables are more then 10% the length of the wavelength of the signals carried (or any coupled signals which might also be present), the potential for a problem exists. The wavelength of a 100 KHz signal is 3000 meters in air. Therefore, problems should exist primarily at very large facilities.

One issue to look at is whether or not cable shields are greater than skin depth thick compared to the signals being carried. Skin depth indicates how far an electromagnetic field can penetrate a conductor before its amplitude is reduced to 37 percent of what it was at one surface. Since

most cable shields are less then a skin depth thick. substantial leakage can occur directly through the shield. The formula for skin depth is provided below.

$$\sigma = 5\sqrt{\varepsilon / \mu_r f}$$

where $\in$ is the resistivity of the metal in ohm-cm
μ_r is the permeability of the metal relative to air
f is the frequency in MHz

The final issue to examine which could lead to common mode or differential mode TEMPEST problems is the facility ground system. It is seldom the case that the grounds in two parts of a building are at exactly the same potential. Very low ground potentials can occur if the building has welded rebar embedded in the foundation, but this is generally not the case in most buildings. If a difference in the ground potential is suspected, a cable shield connecting two locations in the facility should be isolated at one end to prevent current flow in the shield.

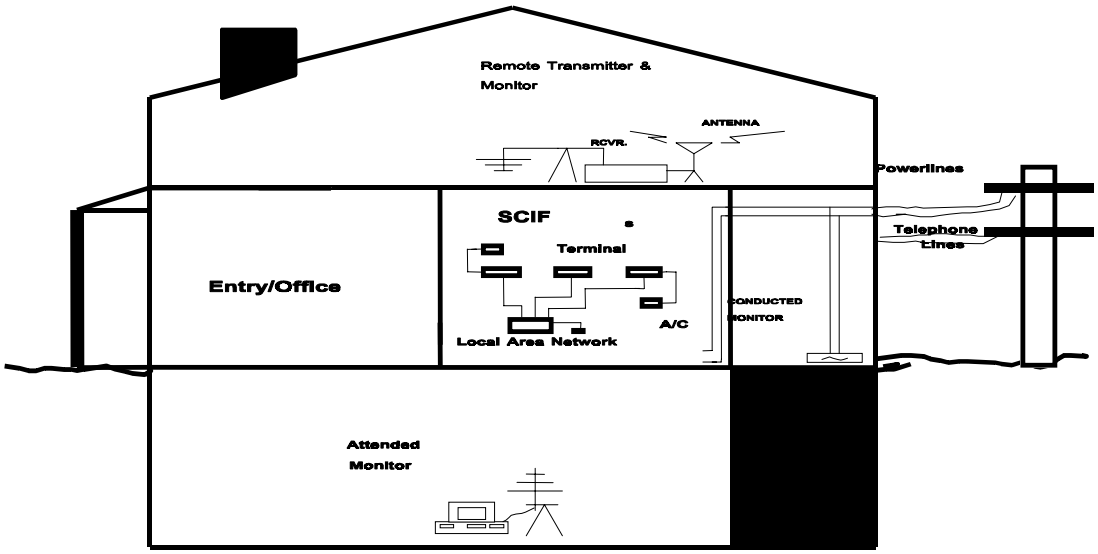

Figure 10.3 - Hostile Threat Locations

As shown in Figure 10.3, hostile threats can be attended or unattended, and can be located above, below, or to the side of the room where secure processing equipment is located. High quality receivers are sensitive to signals within 6 dB of theoretical Johnson noise floor, so sensitivity is not a problem. In addition, techniques have been developed that defeat the need for highly sensitive receivers. Also, real time recorders can be used when analysis is not performed on site, eliminating the need for continuously active interception. For most processing equipment, unless very high resolution monitors are in use, threat frequencies are usually considered to exist primarily between 1 MHz and 300 MHz. The point is that if reasonable access can be achieved to an unsecured site near the processing equipment, the task of

intercepting compromising information is not an impossibility.

For facilities processing classified information, the Equipment TEMPEST Radiation Zone (ETRZ) is a zone established as a result of determined or known equipment radiation characteristics. The control zone includes all space within which an intercept of emanations in considered possible. Notice that this zone refers to radiated characteristics, primarily the E field characteristics. Emissions can take the form of E field or H field radiated emissions, conducted emissions, or emissions from other non-specified (fortuitous) paths. However, for even a medium size installation such as shown in Figure 10.2, identifiable conducted emissions

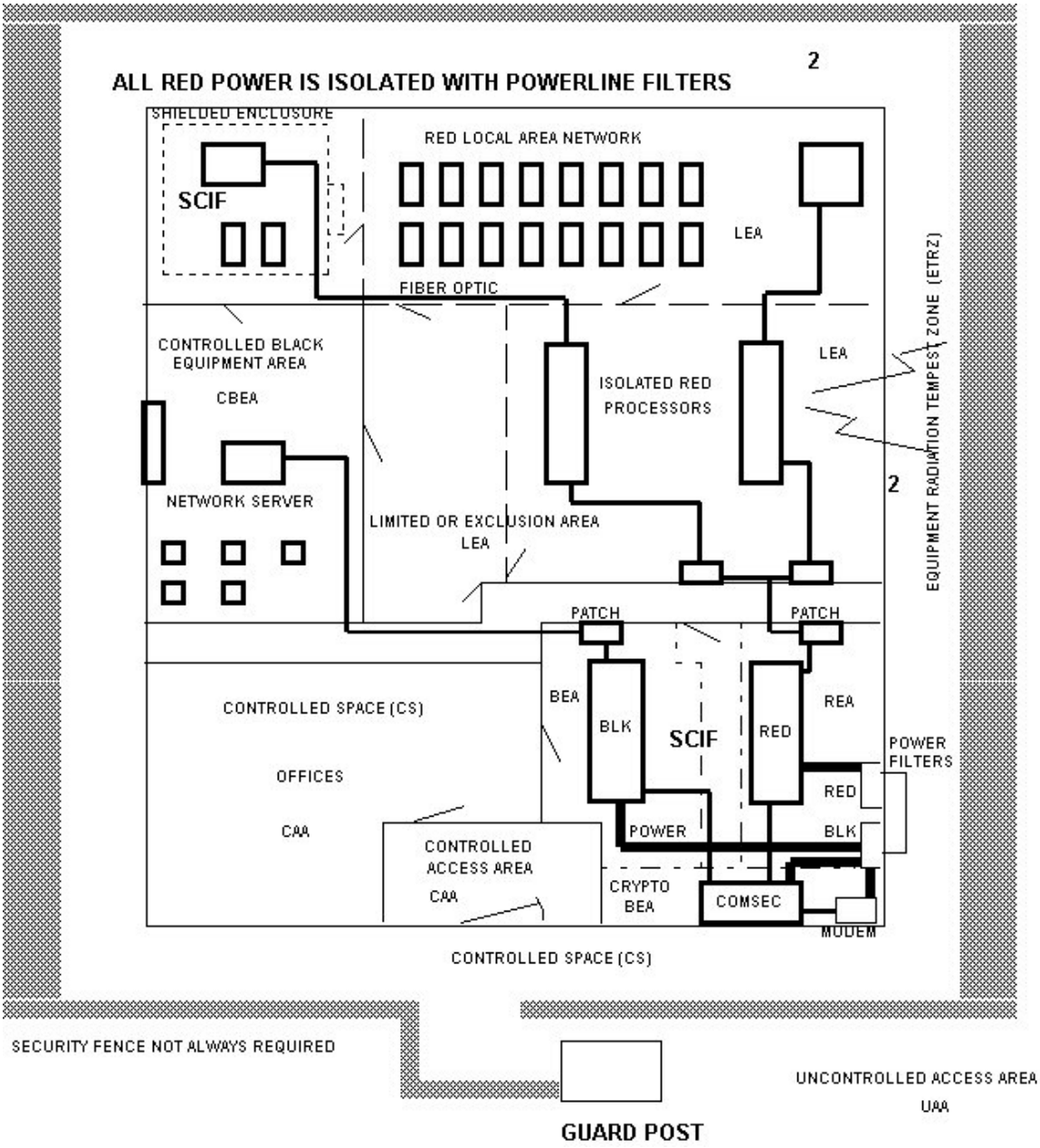

Figure 10.4 – Typical Large Controlled Access Facility

originating from a specific signal source become very difficult to identify as the distance from the source increases. Therefore, for typical protected installations with a large controlled access area (exclusion area), the primary security concern if for radiated signals.

> ***FACILITY GROUNDS***
>
> ***Grounds in two parts of a building are never at the same potential.***
>
> ***If a difference in the ground potential exists, a cable shield connecting the two facility locations should be isolated at one end to prevent shield current flow.***

Equipment Emission Properties

There is currently significant interest in using off the shelf FCC approved equipment in the secure processing environment, while assuring limited additional protection through TEMPEST equipment profiling (zoning) or building walls. In order to evaluate what FCC approval means in perspective, the FCC limits must be compared directly against the specified TEMPEST or security related limits applied to the equipment to be installed. Look at the FCC limits shown in Figure 10.5 below.

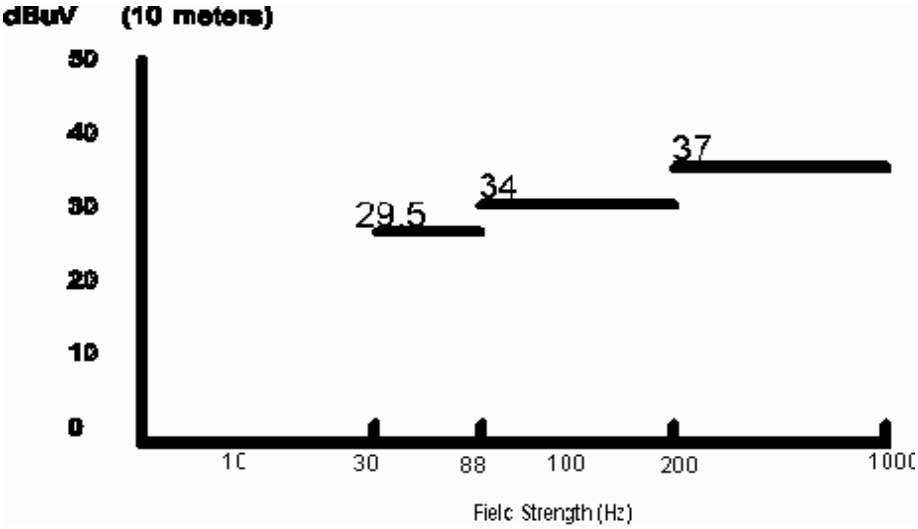

Figure 10. 5 - FCC Part 15 Radiated Emission Limit - Class A

The fact that a package of equipment processing secure information meets the FCC radiated limits shown above is insufficient to provide any rational relating to how much environmental attenuation is necessary for full TEMPEST radiated protection. However, if we know a little information about the equipment being considered, if the FCC report is available, and if we assume all radiated emanations from the equipment carry meaningful TEMPEST information, the problem of environmental attenuation becomes more bounded.

Using the voltage form for bandwidth conversions, take a sampling of the highest level signals between 10 MHz and 1 GHz from the FCC report and convert the levels to levels that can be applied towards TEMPEST limits. Notice also that the FCC measurements are taken at a distance of 10 meters. This conversion calculation is a little more difficult since transmission is directly effected by the physical proximity of the conductive ground to the receiving antenna.

In general, for free space, optimum transmission is achieved when two doublets are parallel to each other and perpendicular to the line connecting their centers. If their distance apart, d, is large compared to the wavelength of the propagating signal, the ratio of power transmitted to maximum useful power received is easily determined from the following equation:

$$\frac{P_2}{P_1} = (3\lambda/8\pi d)^2$$

"P_2 is the power delivered to a matched load at the output terminal of the receiver and P_1 is the power fed to the transmitting antenna. d and λ are measured in the same units. If transmission takes place over a conductive ground or in a refracting atmosphere, the power ratio changes slightly to include the antenna gains G_1 and G_2 of the transmitting and receiving systems, and a new factor Ap is added representing the "path factor". If the electric field at the position of the receiver is desired, it is found by solving the following for power in watts and E in volts per meter."

$$E = 3\sqrt{5}\,\frac{\sqrt{P_1 G_1 A_p}}{d}$$

ROUGH TEMPEST VULNERABILITY ASSESSMENT

By subtracting the allowable TEMPEST level from the FCC emission level at various frequencies selected, a fairly accurate estimate can be made of the level of attenuation required to meet TEMPEST security, through either space loss or by shielding.

Notice that d appears in the denominator, and the path factor appears in the numerator. It is obvious that the most important and difficult part of determining field strength is the quantitative determination of the path factor as a function of the geometry of the transmission path, electromagnetic properties of the conductors or grounds associated with the path, the refractive properties of the atmosphere, and so forth. We could go on and examine the electromagnetic properties of grounds as described by their complex dielectric constants, etc., but our purpose is a bounded and simplistic solution to the radiation problem. Therefore, we will assume simple free space transmission as a worse case, and can use the chart provided in Figure 10.6 to determine relative field strength loss for various frequencies and distances. From the chart, the field strength loss in dB will be added to determine the appropriate level for the FCC emission to be compared against the TEMPEST limit.

By subtracting the TEMPEST emission level from the FCC emission level at various frequencies selected, a fairly accurate estimate can be made of the level of attenuation required to meet TEMPEST security, through either space loss or by shielding.

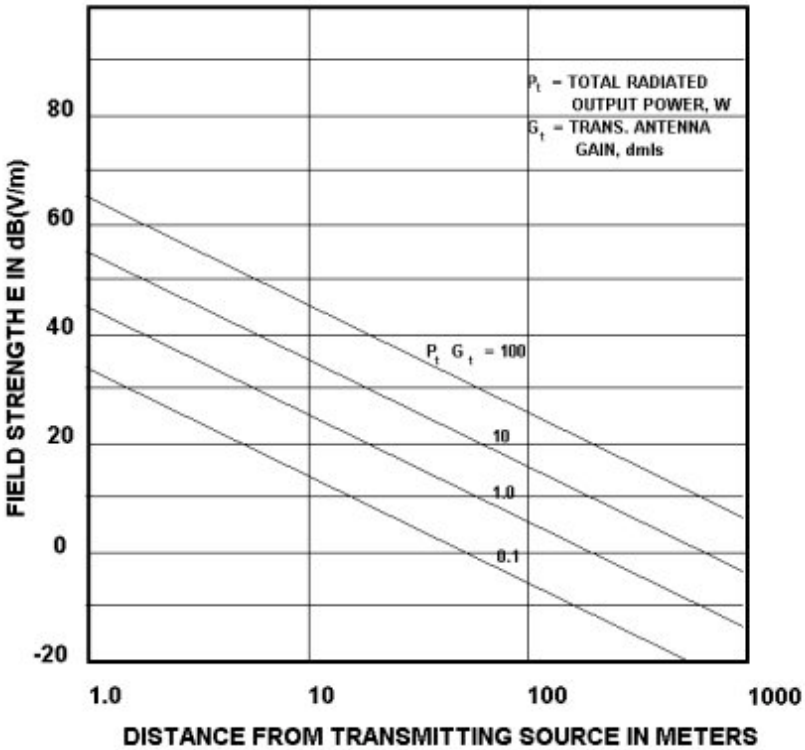

Figure 10.6 - Approximate Loss in Field Strength With Distance

Environmental Shielding

All structures provide a certain level of environmental shielding at some frequency. According to Ferraris[1], research has shown that the attenuation provided by dry, single layer brick is negligible below 300 MHz. Above 300 MHz, some attenuation may occur, but usually less then 5 dB. Block wall and brick construction, and also non-reinforced concrete, have nearly identical characteristics.

I-beam girder construction, typical of that used both on external walls, and some internal office walls with aluminum or conductive replacements for wood 2 x 4 construction, provide shielding dependent on the spacing of the girders. Anodized aluminum, however, looses between 30 and 50 dB of shielding effectiveness between 100 KHz and 100 MHz, and will provide little in the way of environmental attenuation if used in wall construction. For maximum shielding, the metal must be well bonded to the building ground, not simply attached with a bolt at one or two points. This means that if bolts attaching the beams and

ENVIRONMENTAL SHIELDING

Non-reinforced concrete, block wall, and brick provide no attenuation below 300 MHz, and about 5 dB above 300 MHz.

I-beam girder construction when beams are bonded and well grounded provides shielding dependant on the spacing of the girders.

Reinforced concrete provides the greatest environmental attenuation, especially if the cross-members are welded.

Since very little attenuation is realized above 30 MHz regardless of construction material used, additional shielding is nearly always required when additional TEMPEST isolation is necessary.

[1]*Ferraris, L.,* ***The Screening of Existing Rooms and Buildings****, RFI Shielding, Braintree, CM7 7YW, Enigma Variations, 1988.*

girder assembly, plus the surfaces attached themselves, were not cleaned prior to assembly, some additional degradation (20 to 30 dB) of shielding effectiveness occurs.

The calculation of environmental shielding for I-beam girder construction is straight forward. The cut-off frequency for the wall being considered is the frequency below which attenuation is virtually non-existent. This frequency directly relates to girder spacing, and is approximately the frequency at which the girder spacing is approximately one tenth of the wavelength. The cut-off frequency is calculated from:

$$f_c = \frac{C}{2d}$$

Where c is the speed of light and d is the distance between the girders. From this equation the shielding effectiveness at some frequency of interest f can be found from:

$$SE(dB) = 20 \log \frac{f_c}{f}$$

Reinforced concrete provides the greatest environmental attenuation to radiated signals. Iron reinforcement rods used in floors and ceilings are connected in a grid pattern, and can provide significant shielding, especially if the cross-members are welded or otherwise conductively attached. In addition, The ends of each rod must also be bonded if maximum attenuation is desired. The requirement for welded rebar in new structures is often a construction requirement.

In this case the cutoff frequency is again the frequency where the maximum spacing of the grid is about one tenth of the wavelength. However, in this case also we have multiple grid openings in the form of squares surrounded by conductors.

The final building construction method is the use of hollow steel ribs with layered concrete. For this case there is usually no solid electrical contact between adjacent ribs. Therefore, as in the case with brick or block wall construction, environmental attenuation is found from the previous equation.

One important point to clarify is that although some attenuation is available at about 3 MHz, there is virtually no attenuation provided above 30 MHz. Therefore, since the radiated threat from most data processing equipment exists above this frequency, additional shielding will still be required in most instances, either from room to room or from room to outside wall.

Only an in depth review of the facility, equipment, and security requirements, plus a detailed review of the building construction characteristics will allow the incorporation of security engineering features into the design. To accomplish this objective, and to determine the amount of increased structural shielding required, an understanding of the shielding effectiveness of the various shielding options is required.

Shielding Effectiveness Theory and Facility Construction

Figure 10.7 is the standard representation of incident wave, reflected wave, absorbed wave, and re-reflected wave. Shielding effectiveness for the so-called "infinite plane" is expressed mathematically as:

$$SE = 20 \log |e^{lv}| + 20 \log |\frac{1}{\tau}| + 20 \log |1 - re^{2vl}| = A + B + C$$

where l thickness of the shield
v propagation constant of the shield
τ the transmission coefficient
r
reflection coefficient

It is not the intent of this section to go into a detailed analysis of shielding theory, especially for realistic shields, but instead to evaluate the reflected component of the above equation.

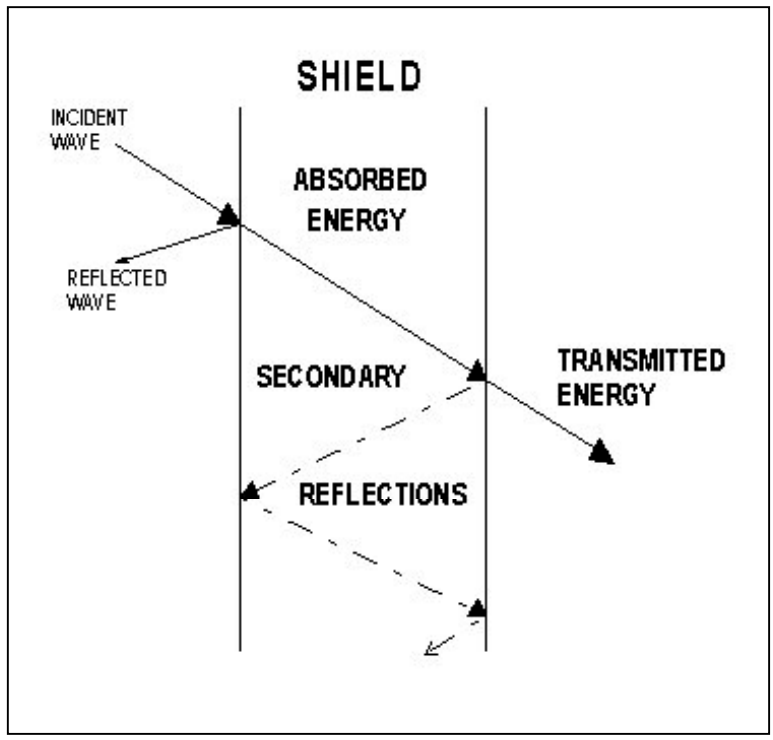

Figure 10.7 - Wave Attenuation by a Shield

Reflection loss depends upon the distance from the source to the shield rather than upon the shield thickness for both low and high impedance fields. In these cases, the reflection loss decreases as the frequency increases, and is better when the ratio of g/μ is higher. g is the conductivity of the shield material relative to copper, and μ is the relative permeability of the shield material.

The EM field at a distance of more then a few wavelengths from its source is essentially a plane wave usually with a wave impedance equal to the intrinsic impedance of the propagation media (377 ohms for air). Unlike the low and high impedance fields associated with the near-fields of magnetic dipole and electric dipole sources, the plane wave field reflection loss is

independent of the distance between source and shield. The plane wave reflection loss decreases as the wave frequency increases, and is better for shielding materials with lower μ/g ratios.

The bottom line with all the above theory is that it is possible in some instances to provide significant shielding effectiveness to an existing structure through the use of multiple thin layer shields located at successive locations within the structure. If walls are being built, a layer of conductive material both outside and inside each panel side, and on both sides of a wall, will greatly enhance the attenuation characteristics of the wall. The ideal situation is to provide one multiple shield layer on both sides of the wall near the processing equipment, and then provide a second multiple layer on a wall located at a distance based on the calculated threat in the far field from the processing equipment. Using steel doors and metal plates on outlets will reduce potential shield degradations due to discontinuities.

Ceilings and floors, especially false floors, are protected in the same manner as walls, but in these cases, additional consideration must be placed on the shield degradation effects based on continuous stresses and discontinuities in the shield.

Windows can be protected using either a mesh laminated between glass panels, or a conductive coating sprayed on the outside of the glass. Below 1 MHz mesh attenuation is slightly better then glass coatings, and averages about twice as much attenuation from around 10 MHz up. It is important to note that either technique is expensive, and should not be considered unless absolutely necessary, or when other interior shielding is ineffective.

Apertures

Theoretical shielding effectiveness and attenuation calculations are based on an infinite conductive plane with a finite thickness. When this plane is penetrated by a discontinuity, the shielding effectiveness is degraded by leakage of the electromagnetic energy. The amount of energy able to penetrate through an aperture is related to the longest physical dimension (d) of the hole, and the wavelength of the radiating field. For wavelengths equal to twice the hole dimension or larger, the energy will pass through the opening with no attenuation. The frequency where the energy passes without attenuation is the cut-off frequency described earlier f = c/2d. Below this frequency, the aperture attenuation can be found from:

$$R(dB) = 20 \log \frac{\lambda}{2d} \qquad t \text{ is the wall thickness } \frac{\lambda}{2} > d > t$$

Apertures reduce both the reflection and absorption characteristics of a shield. The reflection term is lowered as a result of an increase in the barrier impedance relative to the wave impedance. This increase in barrier impedance is caused by leakage inductance, and is related to the dimensions of the aperture and the spacing of the radiating circuits from the aperture. Normally, an aperture provides 0 dB shielding at the cut-off frequency, and increases linearly at

20 dB per decade as frequency decreases. Figure 10.8 shows aperture attenuation for various values of thickness d. These values are accurate for noise sources located at a distance at least as far or farther away from the hole than the value d.

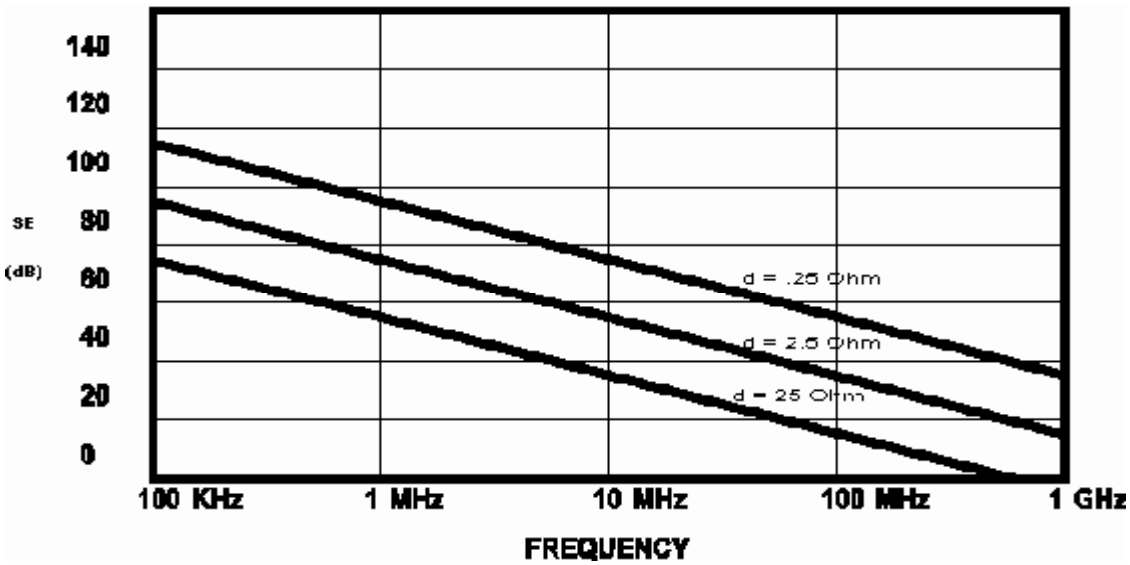

Figure 10.8 - Aperture Attenuation

At distances closer than d, the approximate cut-off frequency is reduced proportionally to the ratio of the distance (r) from the aperture to the dimension d. The approximate cut-off frequency and attenuation are changed to:

$$f_c = \frac{C}{2d}\left(\frac{r}{d}\right)$$

$$R_{dB} = 20\log\frac{f_c}{f} = 20\log\frac{\lambda}{2d}\left(\frac{r}{d}\right)$$

$$where \quad \frac{\lambda}{2} > d$$

For a wall hole such as non-metal electrical switch holder and cover, the hole resembles a rectangular waveguide. The cut-off frequency for a rectangular waveguide is:

$$f_c = \frac{1.5 \times 10^{10}}{w_{cm}} = \frac{5.9 \times 10^{9}}{w_{inch}}$$

where w is the largest dimension of the waveguide cross section.

For frequencies much below the cut-off frequency (f/f_c) much less then 1, the absorption loss A becomes:

A dB = 27.3 t/w
Where: t = depth of the waveguide

Available Facility Shielding Techniques

When available facility attenuation and inherent emission characteristics are such that increased attenuation from the facility becomes necessary, a variety of techniques can be used to upgrade facility emission protection.

Four primary methods are used to enhance interior shielding in buildings; conductive coated walls, foil linings, copper mesh screens, and metal enclosures. Each technique has advantages and disadvantages depending on logistical and life cycle factors such as permanence, location, physical proximity to potential threat, level of threat, physical proximity of processing equipment, looks, budget, environment, and size requirements. However, conductive spray coatings and metal foils lend themselves to outer decorations and paint coverage better then metal or mesh walls.

COATING MATERIALS

RFI Shielding
- ***Zinc-Tin Spray***
- ***Nickel Filled Acrylic***
- ***Nickel Filled Aqueous Polymer***
- ***Graphite Filled Acrylic***
- ***Two-part Copper/Epoxy Polymer***
- ***One-Part Silver Acrylic***

Conductive Adhesives
- ***Two-Part Silver Epoxy***
- ***Two-Part Copper/Epoxy Copolymer***

AVAILABLE SHIELDING METHODS

- ***conductive coated walls***
- ***foil linings***
- ***copper mesh screens***
- ***metal enclosures.***

Conductive paints are available that use silver, nickel, graphite, or copper as their base. Paints are easy to apply on multiple surfaces between the data processing equipment and the outer edge of the protective zone for existing buildings. Table 1 describes the advantages and disadvantages of each type. Note that overlap seams are not required for paint applications.

Table I - Advantages and Disadvantages of Paint Types

Base	Advantages (single coat)	Disadvantages
Silver	Good conductivity Conventional equipment Resistant to flaking	Expensive

	Conductive oxide Ease of application 60 - 90 dB Shielding	
Nickel	Conventional equipment Good conductivity Oxidation resistant 30 - 60 dB Shielding	Need proper dry film thickness for maximum shielding effectiveness Moderately Expensive
Graphite (carbon)	Conventional equipment Good corrosion resistance Inexpensive 5 - 20 dB Shielding	Not very effective shield
Copper	Conventional equipment Ease of application Questionable corrosion resistance 30 - 60 dB Shielding	Copper oxidation reduces conductivity Moderately Expensive

The conductivity, and hence the shielding performance of metal filled coatings are effected by factors such as pre-coat, coating thickness, coating formulation, viscosity, and drying rate. The surface treating prior to metal coating in important to insure the metal coating does not flake off. The substrate should be coated with materials compatible with the resin used for the metal filler. The formulation of the paint is important and can effect the conductivity by as much as a factor of 3[2] for coatings of identical thickness. In a very low-viscosity coating layer, the metal filler tends to settle, creating a layer primarily of resin on top and primarily metal next to the substrate. To minimize settling, coatings should be sprayed at as high a viscosity as reasonably possible, and usually with a 1:1 dilution with thinner.

Table II - Metalized Textile

Frequency	***Attenuation***
10 MHz	***65 dB***
100 MHz	***75 dB***
1 GHz	***85 dB***
10 GHz	***90 dB***

The temperature during application, and the temperature extremes the coatings are exposed to, also effect conductivity. Walls should be painted when warm dry conditions exist. Forced drying during application is not recommended since it tends to decrease conduction. As a rule, if forced drying is absolutely necessary, it should not be used until the solvent has flashed off. Normally, slower evaporating thinner is used. Coating to a thickness of .05 mm or thicker will reduce the effects of temperature cycling if the facility is subjected

[2] *Amato, J.R., et al.,* ***Shielding Effectiveness****, IEEE Transactions on Electromagnetic Compatibility, Vol. 30, No. 3, August, 1988.*

to this type of condition. The attenuation properties at 10 MHz of each type of paint are described in Table 2.

Wall linings usually take the form of conductive foils or textiles. Wall linings are often preferred when higher attenuation is required and they facility already exists. Textiles have almost identical characteristics to foils at higher frequencies, and they are much easier to work with. They have high transparency to visible light close permeability to air. Their primary disadvantage is cost since they are considerably more expensive then foil. The Table 3 below lists typical attenuation values for a high attenuation metalized textile:

Table III - Attenuation Properties of Paint

Base	*Thickness (ml)*	*Resistivity (ohm/sq ft)*	*Attenuation (dB)*
Silver	***1***	***0.04 - 0.1***	***60 - 70***
Nickel	***2***	***0.5 - 2.0***	***30 - 75***
Graphite	***1***	***7.5 - 20***	***20 - 40***
Copper	***1***	***0.5***	***60 - 70***

Table IV - Conductive Foil Rooms

Field Type	*Freq. (MHz)*	*Atten. (dB)*
H Field	*0.01*	*28*
	0.1	*50*
	1.0	*55*
E Field		
	1	*113*
	10	*97*
	100	*105*
Plane Wave	*400*	*90*
	1000	*72*
	10000	*66*

The usual material used in foil lined walls is aluminum about 0.1 ml thick. Again, as is the case with spray paints, holes or discontinuities in wall coverage are to be avoided. Specifically, holes or slots larger the 10 to 15 mm are to be avoided. Non-bonded overlapped joints about 100 mm thick provide sufficient capacitive coupling to prevent radiated leakage at seams. Also, foil and other metal rooms require a safety ground attached between the shield and the building ground structure. Table 4 lists attenuation values for conductive foil rooms.

Stand Alone Shielded Enclosures

The three most common base materials used for stand alone shielded enclosures are copper,

aluminum, and steel. Since the slight differences in each of the material's conductivity and permeability have only minimal effect on the amount of shielding provided, the primary determining factor when solid rooms are required is cost. Steel is significantly cheaper then the other materials and is most often specified.

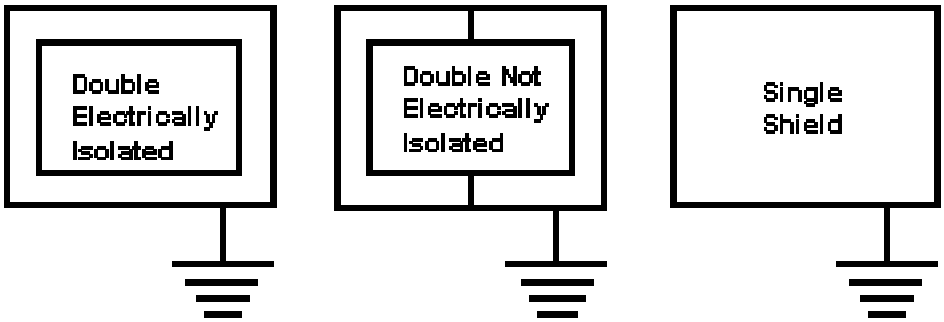

Figure 10.9 - Types of Stand-Alone Metal Enclosures

As shown in Table 5 and Figure 10.9, there are also three types of construction for shielded enclosures that are considered "stand alone". Stand-alone means they are self supporting, usually assembled inside an existing room, and normally on a permanent basis. The three methods of construction are single shield, double shielded not electrically isolated, and double shielded electrically isolated. The figure below compares relative attenuation characteristics of each type of room at 1 GHZ for screen mesh construction.

Table V - Attenuation Comparison for Copper Screen

Room Type	***15 KHz H-Field***	***1 GHz E-Field***
Isolated	***.---------- 68 dB***	***.---------- 120 dB***
Non-Isolated	***.---------- 48 dB***	***.--------- 90 dB***
Single	***.- 6 dB***	***.------ 60 dB***

Copper mesh enclosures are basically stand-alone shielded enclosures that consist of wire covering a wooden frame. Unless magnetic field problems exist, or unless a vault or protected access solid wall type structure is preferred, this form of enclosure usually provides sufficient attenuation for most applications. However, if this type of structure is considered, a safe approach is to first have the facility and potential processing equipment scan tested so an accurate evaluation of needed attenuation is available.

Table VI - Attenuation Comparison of Construction Types

E Field and Plane Wave Atten.

Type	***60***	***90***	***120***
Isolated	---	---	---
Non-Isolated	---	---	
Single	---		

Copper mesh rooms are easier then metal rooms to install, are considerably cheaper, and are not considered "permanent" structures in that they can be taken apart much easier then metal rooms. Table 6, from Lindgren, provides E-field and H-field attenuation characteristics for a 22 x 22 -.015 copper screen room.

Table VII - Attenuation Comparison for Steel

Room Type	***15 KHz H-Field***	***1 GHz E-Field***
Isolated	***.---------- 84 dB***	***.---------- 120 dB***
Non-Isolated	***.------- 68 dB***	***.---------- 100 dB***
Single	***.----- 48 dB***	***.--------- 90 dB***

For maximum shielding, the use of galvanized steel walls is recommended. Individual panels are bolted, welded, or otherwise solidly attached to each other in order to prevent or reduce RF leakage at joints and corners. In general, if the room is not well sealed at corners and joints using copper wool, copper tape, or welding, shielding effectiveness is reduced about 30 dB. Also, steel rooms have a tendency to loosen up with age and require periodic re-work. Table 7, also from the Lindgren enclosure catalog, compares each of the room types for 24 gauge galvanized steel constructed shielded enclosures.

Regarding steel rooms, there are several acceptable techniques to penetrate shields so shielding capabilities will not be degraded. Shown in Figure 10.10 are the commonly acceptable methods used. One of the primary concerns with room penetrations, as well as with metal rooms in general, the necessity to provide good low impedance bonds at metal to metal interfaces, joints, bolts, wave guides, etc.

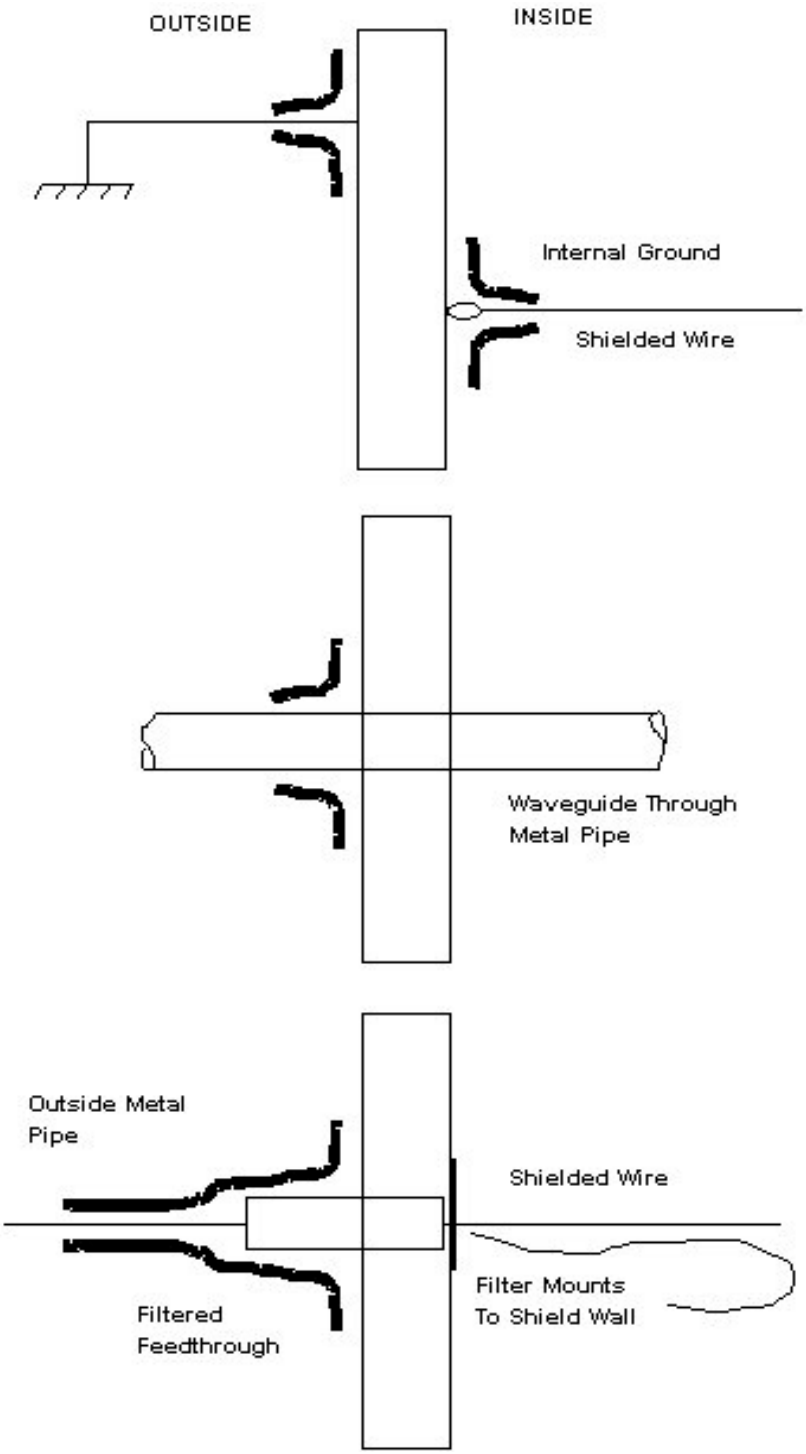

Figure 10. 12 – Penetration Methods

Non-Radiated Problems and Their Solutions

Thus far, this document has concentrated on TEMPEST problems related to radiated emissions and spent little effort on identifying and correcting conducted TEMPEST problems. Relating back to earlier discussions in proposal paper, uneven grounds between different building locations are a primary cause of TEMPEST problems. Using fiber optics between various equipment is a common technique that represents one way of isolating the grounds at each equipment. Another technique often overlooked is the use of isolation transformers.

Isolation Transformers

Isolation transformers are often used to protect high gain circuits, or to prevent ground paths in instrumentation. All transformers isolate circuits electrically to some degree, while simultaneously coupling circuit signals through magnetic induction. The electrical energy is transformed at the same frequency, but usually at a different voltage or current level. As frequency increases, capacitance between the inductor windings tends to shunt higher

frequency components, providing a practical limit to the passband of the device.

Shielding at the instrumentation level or rack level as shown in Figure 10.13 is difficult and often ineffective when ground loops between connected equipment are present. The case or rack acts as an outer shield for internal processing, while serving as the zero signal reference for system output signals. An isolation transformer can be used to control shield currents, and to break up the mutual capacitance between internal instrumentation and the unknown power

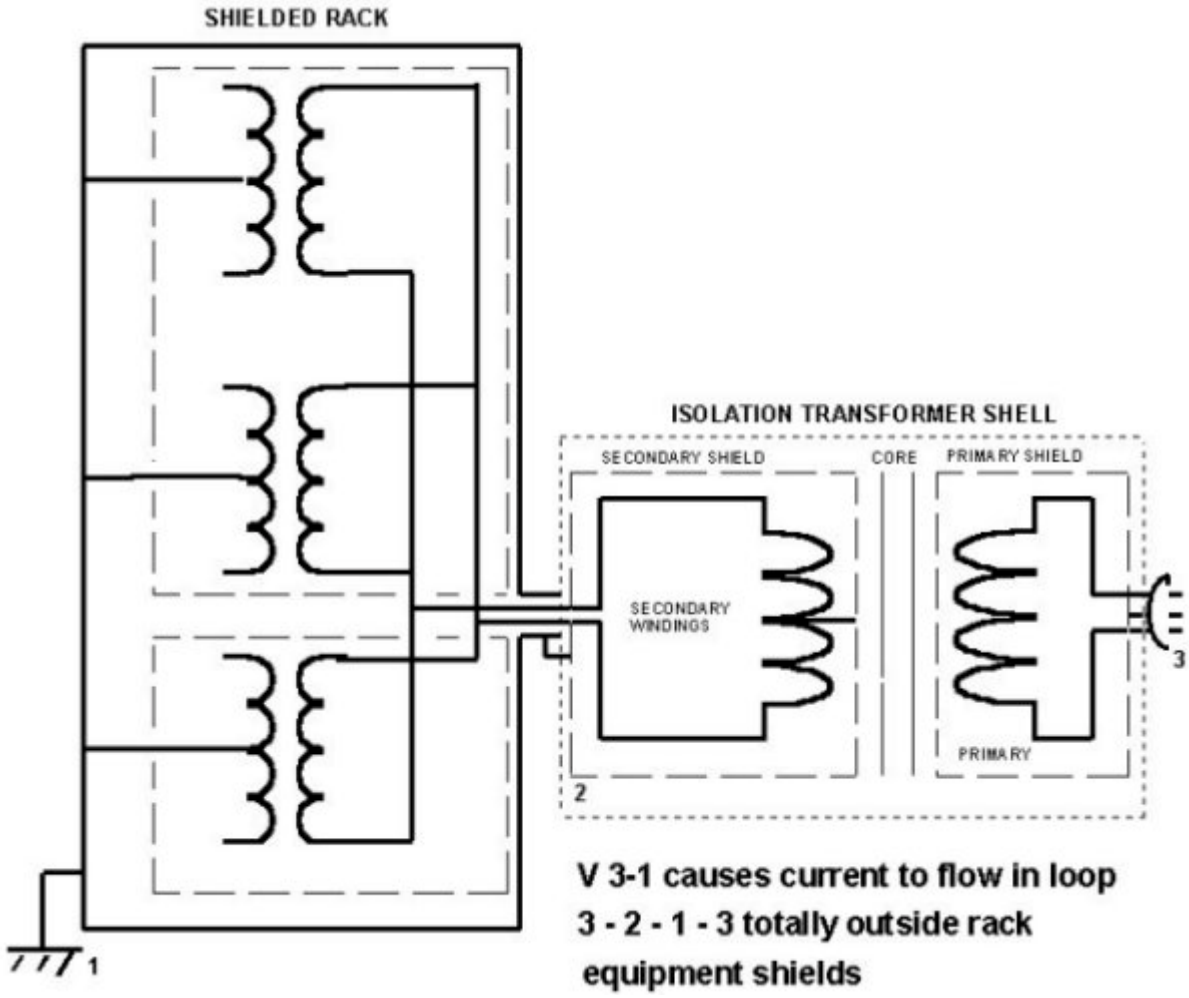

ground.

Figure 10.13 - Shielding at the Rack Level

During the time power is being transferred between windings, noise potentials between the primary circuits and ground is similarly coupled to the secondary through both capacitive and resistive paths. As previously indicated, the noise appears as common mode, differential mode, and also radiated via the transformer windings. Since common mode noise is referenced to the

power system ground, the most obvious method of eliminating this noise is by grounding the transformer center tap to the system ground through the lowest impedance path possible.

The key to maximum noise reduction on powerlines for differential mode applications is to differentiate between power and TEMPEST signal noise, and then reduce the signal noise. Basically, the objective is to transfer the power required by the load at the fundamental power frequency, and to eliminate all higher frequencies. Sub-harmonic frequencies of the primary powerline frequency (such as those relating to early 50 bps teletype) are attenuated or eliminated by operating the transformer at a relatively high flux density. Above the fundamental frequency of the transformer, noise is reduced by introducing as much leakage inductance as possible consistent with good power transfer to the secondary. Most well designed isolation transformers are intended as noise reduction devices, and are designed to operate in the manner described. Therefore, especially when large high current processing systems are involved, isolation transformers rather then powerline filters are sometimes all that is required to eliminate conducted noise. An isolation transformer applied to a screen room is shown in Figure 10.14. Figure 10.14 also shows the application of a powerline room filter.

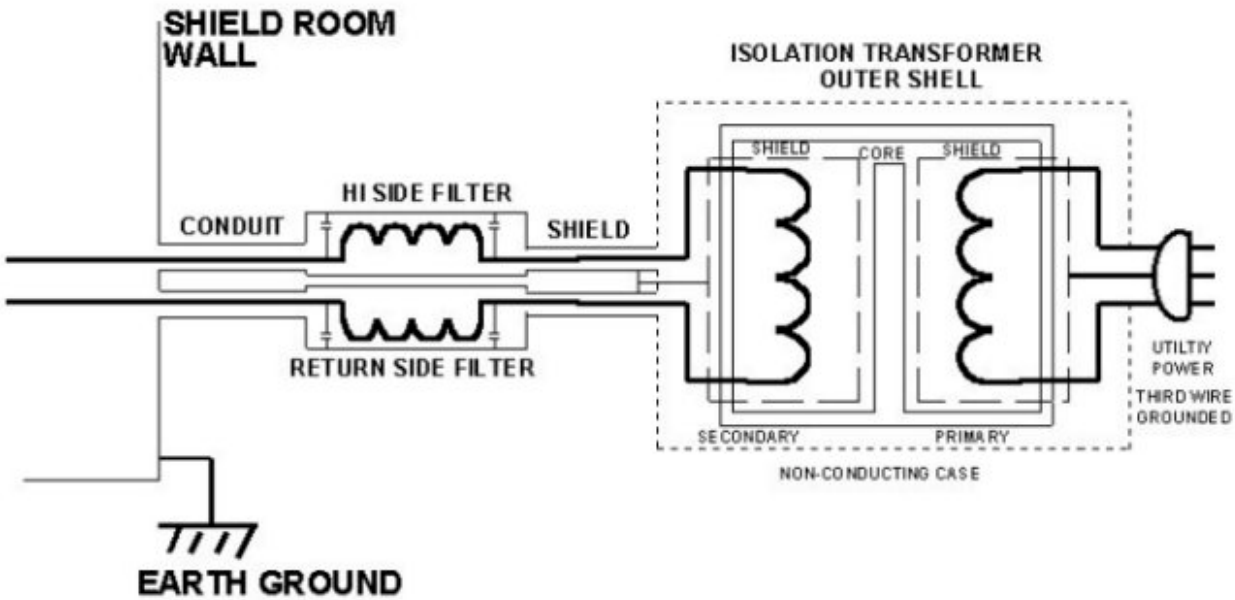

Figure 10.16 – Application of an Isolation Transformer to a Metal Enclosure

Filters

Filtering powerlines to secure processing areas, especially shielded enclosures, is perhaps one of the most misunderstood applications of filters that commonly takes place. Current regulations dictate that powerline filters are not required when average peak power consumption is 100

KVA. While this appears a contradiction of terms, the intent is to prevent unnecessary filtering on facilities located in the continental US (CONUS). To actually determine is power consumption inside a facility meets this criteria, a complete accounting of normal operating times, average power ratings for all equipment, plus information on facility heating and air conditioning would be necessary. The determination could cost more than the installation of filters. The current trend by GAO auditors at this writing is to blanket reject any filtering for CONUS facilities, regardless of vulnerability, so long as they are located in a controlled access area. This paper addresses the proper application and use of powerline filters, regardless of their actual need.

Two objectives are addressed by powerline filtering. For rooms used as test cells, the objective is to reduce outside noise such that signals within the chamber will be easier to detect. For secure areas, the objective is to reduce noise originating internally such that it can not be detected externally.

POWERLINE FILTERING

Not required for CONUS facilities using average power greater than 100 KVA.

Bulk facility filtering the power system has the disadvantage of requiring selection of large filters based on load.

Standard powerline filters provide 100 dB attenuation from 14 KHz to 1 GHz.

In no case should two pi-type powerline filters be connected directly in series.

Neutral filtering is usually not required if less than 1 volt potential exists between the neutral voltage and ground. However, neutral filtering for small RED/BLACK facilities is required by MIL-STD 232A.

Since it is desirable to reduce both common mode and differential mode between the powerlines, and since, for safety reasons, the room must have a safety ground, the best practice is to isolate the entire room from facility ground using an isolation transformer and a local ground rod, and then to provide both common mode and differential mode filtering to the powerlines at the room walls. The isolation transformer can be configured to provide two separate phases of power with a center-tapped neutral, or just a single secondary depending on equipment requirements within the room. The biggest problem is how the room filters are configured.

Screen Room filters are configured as pi-type filters. Capacitors are grounded through a connection to case at the room wall. Adequate filtering normally requires both common mode and differential mode filtering, with the differential mode capacitor located prior to the inductor in each filter, inside to outside for maximum internal security attenuation applications. Therefore, achieving the proper powerline filter configuration for both common mode and differential mode protection will require control of the third wire ground return at all internal plugs by grounding at only one point near the filters, disabling of the internally facing capacitor within the room filter, and finally by placing a properly selected powerline capacitor across the internal high and return wires.

Another problem is how to specify the attenuation characteristics of the powerline filter to be used. It should be obvious by now that the manufacturers listed attenuation characteristics are not easily applied to the potential TEMPEST threat. This is especially true if the equipment being located within the secure screen room is only FCC approved and has no information related to its TEMPEST powerline conducted limits. A good rule of thumb is to calculate or measure the attenuation characteristics of the intended filter at the correct source and load impedance at a frequency of about 100 KHz. If subtracting the filter attenuation and the isolation transformer attenuation from the frequency component of the lowest data rate signal at the same frequency exceeds the proper TEMPEST limit for the frequency selected, the potential for a TEMPEST problem is realistic. In this case, additional filtering or direct TEMPEST suppression of conducted signals in the processing equipment will be necessary.

Communiction Center System Ground Loops

Ground based communications centers, especially those with telemetry links to satellite systems, use high speed central processing computers and other digital processing equipment to manipulate data. The fast transition waveforms create signals tat can conduct or re-radiate to transmission wires or other conductors. The source of such problems is often the existance of a single power system and ground system supplying not only the processing center, but also the encryption devices and the outside world. Figure 10.17 shows a typical transmission system with analog and digital circuitry powered from a single point gorund power supply. Note that the direct connection of the analog and digital ground (dotted line) creates a ground loop and conducted path for the digital signals.

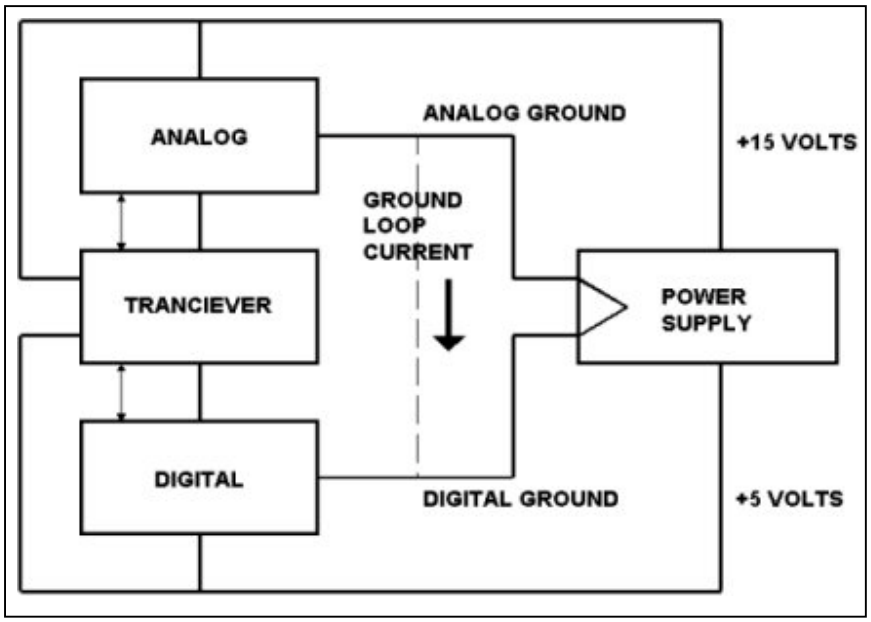

Figure 10.17 – Typical Communications System Powered From a Single Point Ground

The digital computer is not especially sensitive, and small voltage changes do not effect its data output. However, coexisting within this noisy environment are critical analog and RF circuitry that can be sensitive to even the slightest voltage changes. Not only is there a basic operational problem of operating analog circuits requiring a low noise environment, but securing analog circuits from coupled emanations is extremely complicated. Uncompromised data transmission must be smooth and continuous in order to preserve the integrity of a continuously varying signal.

To provide power to all elements of the communications system, the power system is normally tailored specifically to the primary digital computer and a power/grounding system is then tailored for the low-level signals.

Real Facilities

Proper engineering techniques regarding equipment installation must also be applied to prevent inadvertent signal coupling, such as those suggested in NACSEM 5203 and various EMC documents. In addition, special requirements and techniques are applicable when acoustic security in specified. Dealing with the typical radiated emission issue first and referring back to Figure 10.1 at the beginning of this chapter, the figure shows a typical two room TEMPEST secure control zone with a super computer being accessed by a local area network located in the SCIF. Notice that the interface from the computer to the outside world used only a COMSEC box. Real facilities might also include access to both telephone lines and a telemetry link. However, when an antenna is associated with the secure processing area, as previously discussed, grounds and potential ground loops become extremely critical.

Figure 10.18 shows a typical facility consisting of a RED and BLACK exclusion area, with un
im

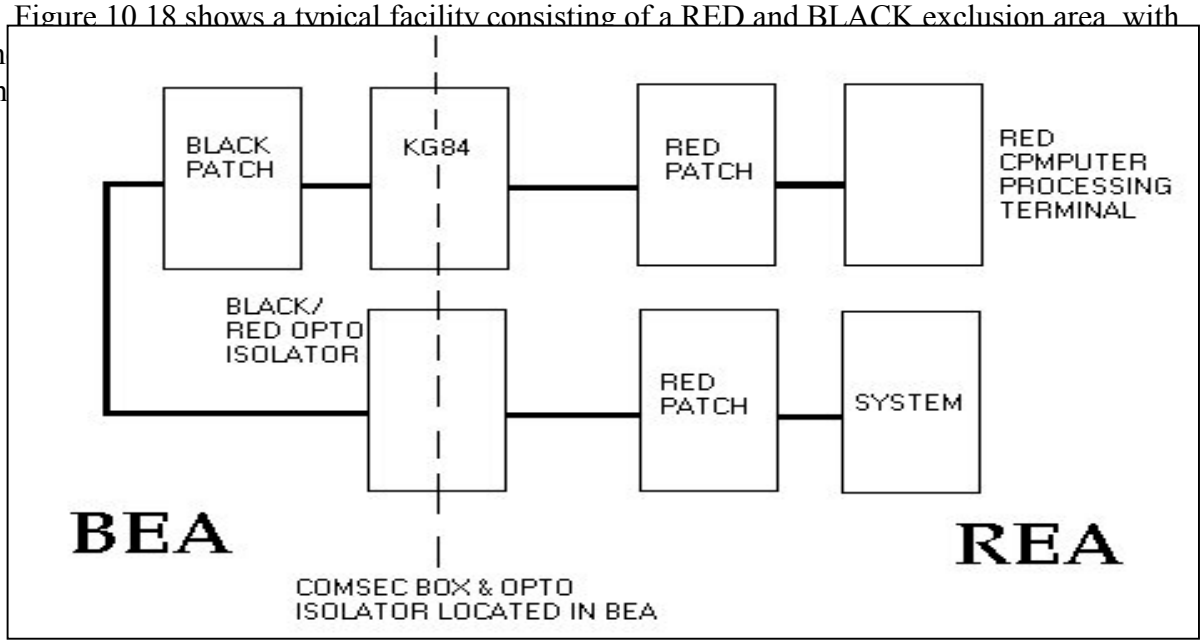

Figure 10.18 - Typical "Real" System With Patch Panel Used

Note in Figure 10.18 that only the collector and emitter of the opto-isolator are carried, all lines are MIL-188-144 balanced, all cables are foil shielded pairs with an outer flexible weave metal shield, and the cable shields are isolated before they connect to the KG 84 or the isolator.

Figure 10.19 shows the suggested wiring and cable/conduit separation controls for communications cables and power cables in a small secure area. Notice in the upper power system layout, BLACK power enters the secure area through one feed, and is then separately filtered to feed each exclusion area. Light switches for the secure area use pre-filtered power. The wires themselves are normally shielded in rigid conduit. The lower communications cable layout shows a plastic splice isolating the conduit housing the signal cables between RED and BLACK.

Conclusions

This chapter has described suggested methods of evaluation for the needs of secure facilities. Significant misinformation currently exists related to the proper techniques for evaluations and how to assess the attenuation needs of equipment processing secure information. The primary emphasis has been placed on cost effectiveness in terms of what could be used and what it will ultimately be required to meet the desired objectives of a facility security program. The "bottom line" for determining vulnerability after construction is to test when unsure, it could save considerable grief and money for the program.

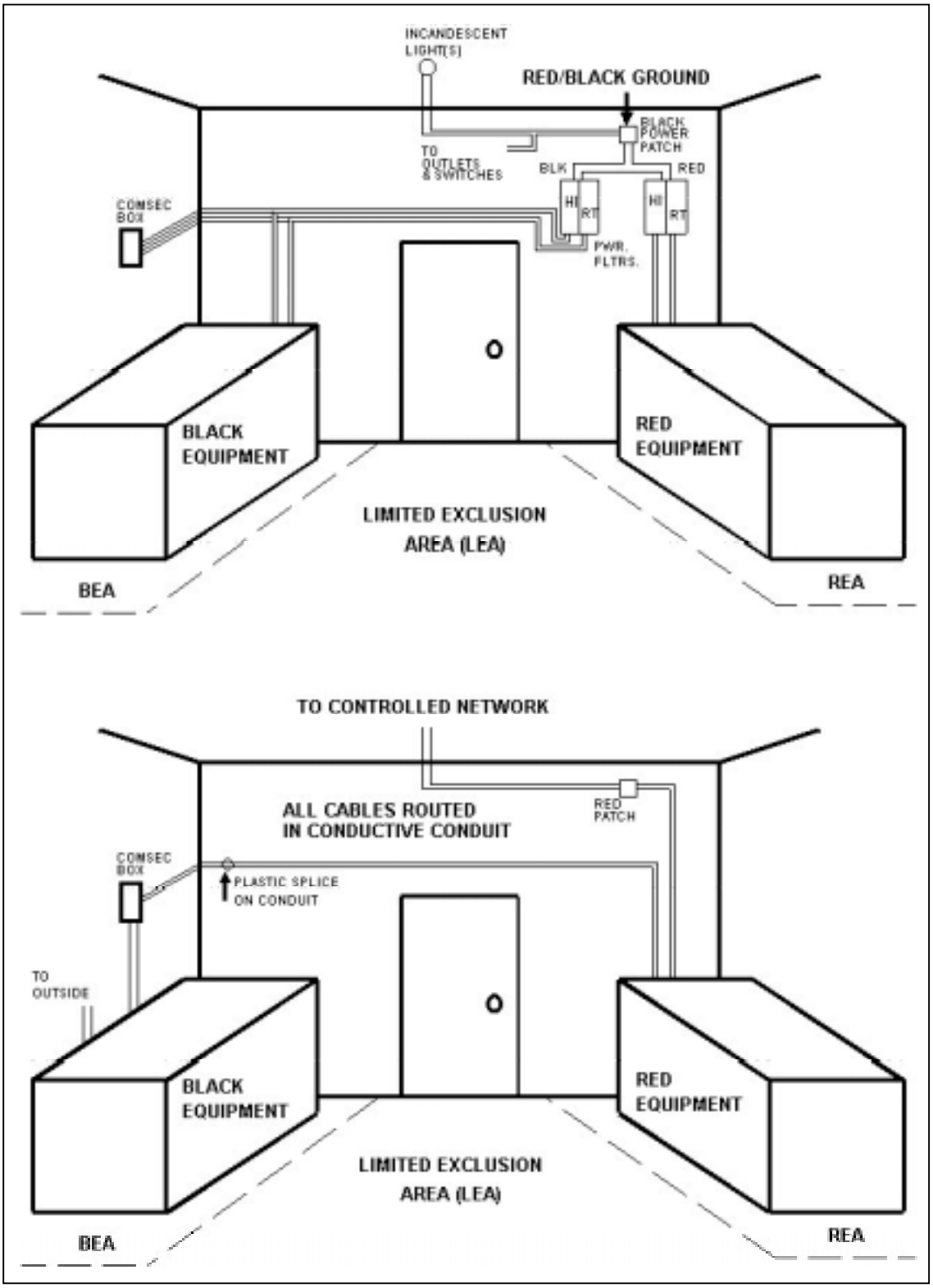
INCANDESCENT LIGHT(S)
RED/BLACK GROUND
BLACK POWER PATCH
TO OUTLETS & SWITCHES
BLK
RED
HI
RT
HI
RT
COMSEC BOX
PWR. FLTRS.
BLACK EQUIPMENT
RED EQUIPMENT
LIMITED EXCLUSION AREA (LEA)
BEA
REA
TO CONTROLLED NETWORK
ALL CABLES ROUTED IN CONDUCTIVE CONDUIT
RED PATCH
COMSEC BOX
PLASTIC SPLICE ON CONDUIT
TO OUTSIDE
BLACK EQUIPMENT
RED EQUIPMENT
LIMITED EXCLUSION AREA (LEA)
BEA
REA

Figure 10.19 – Suggested RED/BLACK Room and Cable Layout

Chapter 11

SCIF Configurations

Introduction

A Sensitive Comparmented Information Facility (SCIF) is used to compartmentalize and contain specific levels of classified information processing equipment and operations. The requirements document, DIAM 50-3[1], is applicable to secure working areas, temporary secure areas, and some special access control areas. It establishes minimum standards governing the construction and protection of facilities for storing and processing SCI and related material.

SCIFs have specifically defined TEMPEST requirements for the control of emanations which may exceed the SCIF boundaries. These requirements are called out in TCO/BCO letter "SCI TEMPEST Policy and Guidance (U), CONFIDENTIAL", and referenced in 50-3. Telecommunications, transceiver signal lines, and data processing network cables, plus the associated RED equipment installations are each covered in various sections of the document. This chapter will address the applicable sections dealing with hard wire and cable design.

General Guidance

Security is implemented within a SCIF through the use of countermeasures directed at the critical primary areas of grounding, bonding, shielding and cable distribution. Each of these primary areas are interactive. Grounding and cable distribution effects how shield currents and offset voltages interact. Bonding effects shielding characteristics as well as current flow.

The equipotential ground plane or ground bus provides the signal ground reference for returning currents to their source, or for referencing to the facilities Earth Electrode Subsystem (EESS). For a facility, the EESS can be ground driven rod network, building structural steel, a metallic cold water pipe, or any other continuous metallic structure. The intent is to make this one point the lowest impedance point for any extraneous currents which may be flowing from any source.

Welding is the preferred bonding method over pressure bonds. As was the case with attaching cable shields to backshells, a poor bond will hamper a nonferrous metal shields ability to contain radiated electric signals as well as cause reflected currents to flow in alternate paths. Ferrous metals that are used to control magnetic fields do not require low impedance bonds to ground.

---

[1] ***Physical Security Standards for Sensitive Comparmented Information Facilities, Defense Intelligence Agency Manual (DIAM) 50-3. Implements the requirements of USIB-D-9-1/20***

The most critical part of the RED/BLACK engineering effort for a SCIF is the distribution of cables within the facility. By approaching the problem as a boundary condition, with each cable run extending a potential current from source to sink within a particular boundary, the integrity of the entire system can be maintained. Such a condition is shown in Figure 11.1.

Local Area Networks

Installations should be looked at from both the system and the interface level. At the system level, the cable runs require physical isolation for the highest level of security. MIL-HDBK 232A provides a separation distance of 3 feet between BLACK and RED equipment racks, with 3 inches minimum separating the RED and BLACK cable runs. The runs should be shielded and should not be configured parallel if possible. Digital interfaces between LANs or other communication devices are usually implemented with fiber optics, twisted shielded pair (TSP) or coax (for higher frequency communications).

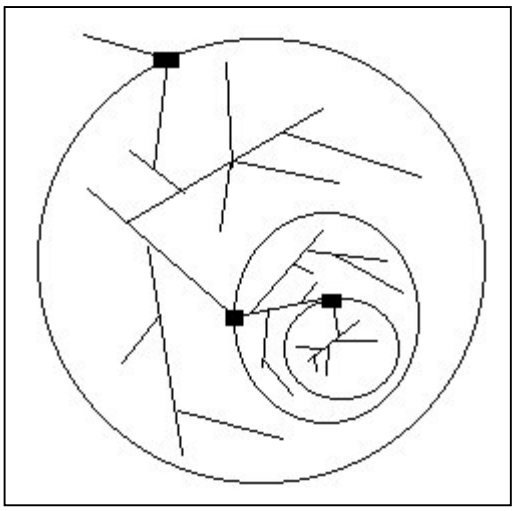

Figure 11.1 - Three Boundary Layers With Interface Controls

Private automated branch exchange LANs are used for short-term connections, low speed operation, and low volume transfer. These consist of point-to-point links. When only one link is established at a time, RED/BLACK boundaries are clearly defined and easy to control.

Broadband LANs use frequency division multiplexing on coaxial cable to establish communications. These have a typical bandwidth of 300 MHz to 400 MHz with multiple subchannels within the band. Transmission between host and user is usually encrypted and then modulated. Unencrypted LANs are either all RED or all BLACK.

Baseband LANs employ baseband (pulsed DC or bursted cw) signaling using pulse modulation (usually pulse position modulation) and time division multiplexing on a single physical transmission medium. Data rates of 10 MBPS are achieved between nodes with up to 1000 nodes possible. For these LANs, all users operate at the same security level and the entire LAN is located in a single protected distribution system (PDS).

Drivers and Interface Connections

For TSP, three primary standards exist for these interfaces which consist of two wire high/return

configurations. MIL-STD-188-114 is the recommended interface standard for RED TSP cabling. This interface provides isolated signal and return wires and significantly reduces emanation problems. EIA RS-232C is the most common unbalanced interface used in commercial equipment. Electronically, it is similar to MIL-STD-188-114, but only provides a single signal ground/common return on pin 7.

When the RS-232 interface is used, it must be retrofitted as shown in Figure 11.2. The circuit AB is the common commercial supplied configuration. Circuit AB shows the DIAM specified interconnect. This retrofit meets the required 188-114 criteria.

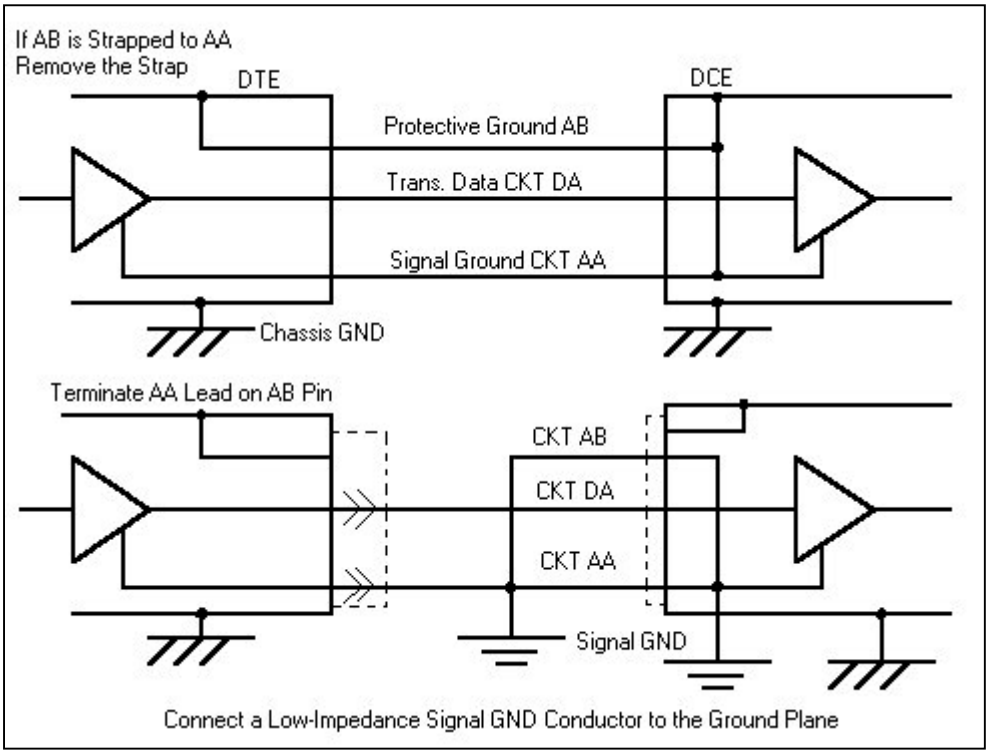

Figure 11.2 - Required RS-232 Retrofit

EIA RS-449 is another common commercial interface standard. This standard assumes that all data and clock lines have individual returns. It is implemented using a 9-pin connector for simple (send only) duplex, and a 37-pin connector for full duplex connections. When using this interface, pin 1 should not be used to terminate the shield.

Telephone Cabling

All incoming telephone cables and wires which penetrate the SCIF boundary must enter through one opening and must be placed under control once inside. This opening is called the Facility Entrance Plate (FEP), and serves as the single ground reference point for all undesired circulating currents. Powerline filters are circumferentially bonded to this plate, which in tern is physically attached to the facility reference ground. Filters for both voice and data are bonded to an enclosed distribution frame, also connected through a low impedance path the FEP.

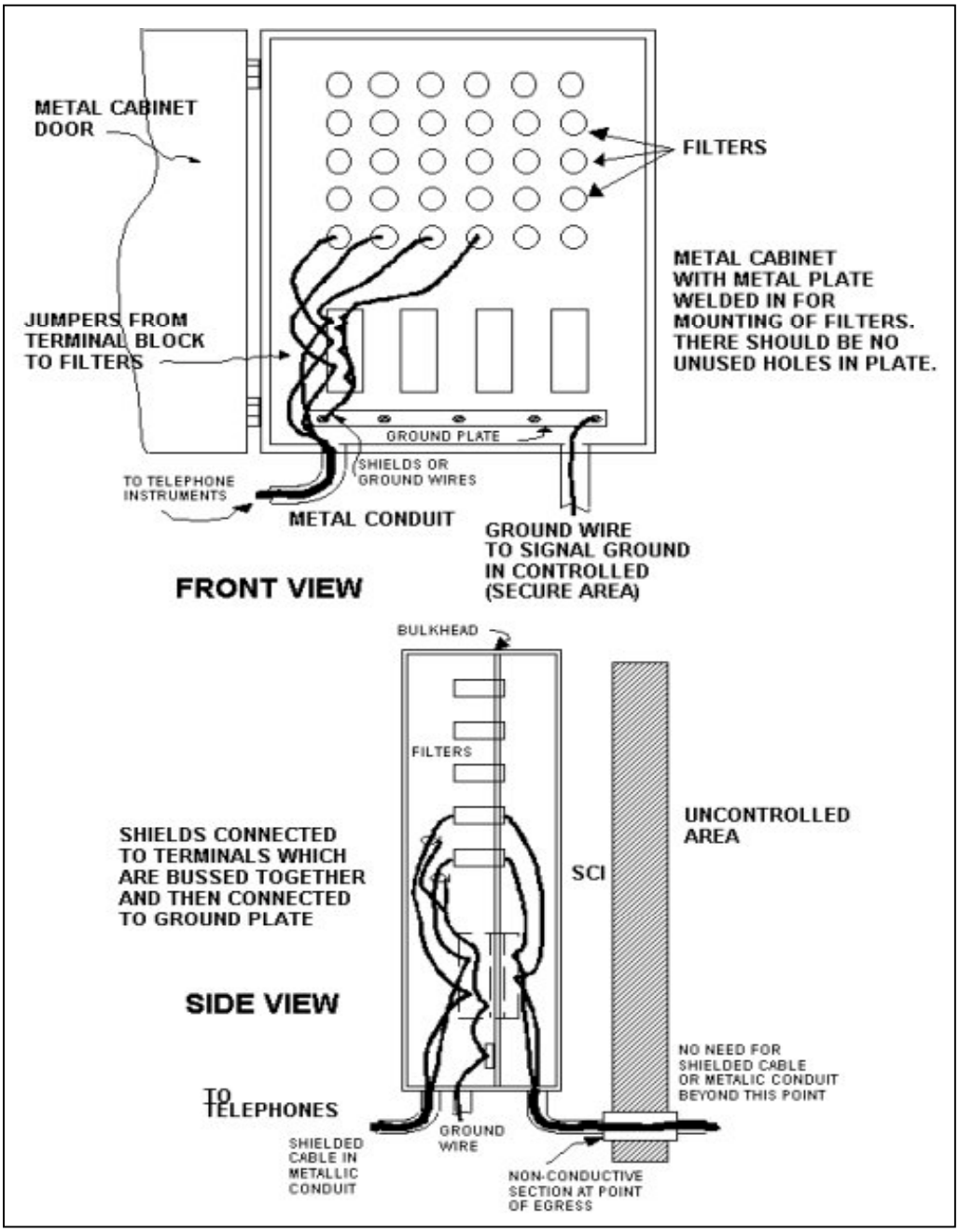

Figure 11.3 - Distribution Frame for Phone Interface Lines

A typical distribution frame for phone interface lines is shown in Figure 11.3. Figure 11.4 shows the positive cable control of a single phone line while Figure 11.5 shows the routing of several phone types.

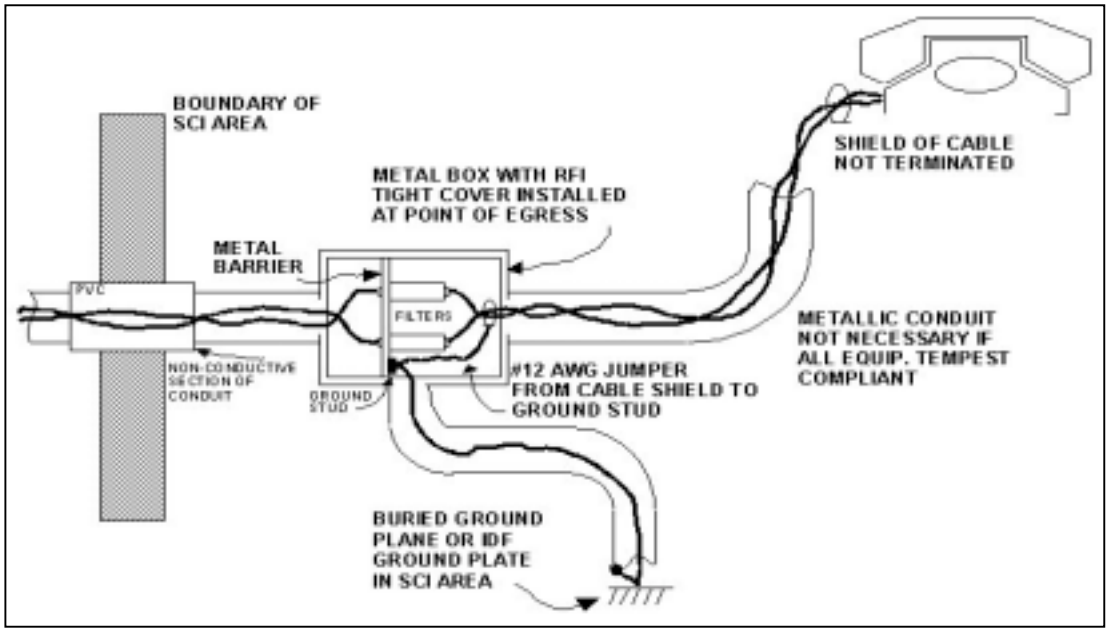

Figure 11.4 - Cable Control of a Single Phone

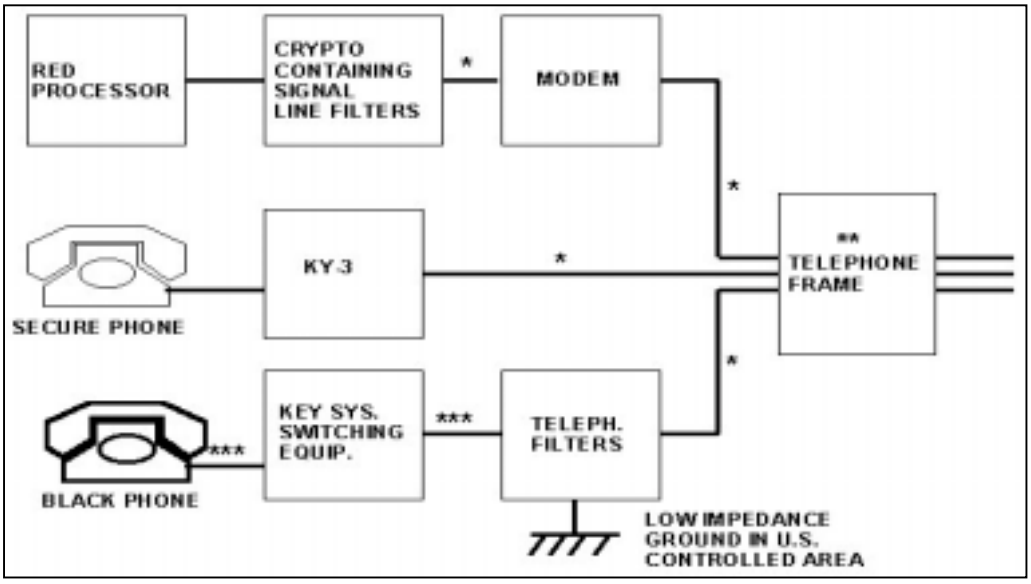

Figure 11.5 - Phone Cable Routing